PVM-1350/1351Q/1354Q

SERVICE MANUAL

US Model
Canadian Model

PVM-1350
Chassis No. SCC-G61D-A
PVM-1351Q
Chassis No. SCC-G61C-A
PVM-1354Q
Chassis No. SCC-G61B-A

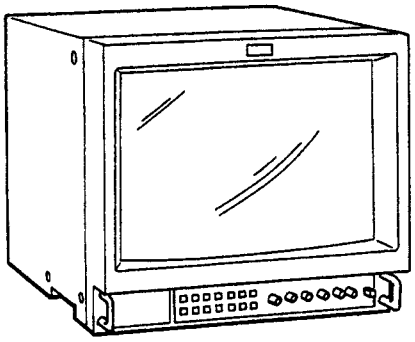

SPECIFICATIONS (PVM-1351Q/1354Q)

Video signal

Color system	PAL, SECAM, NTSC3.58, NTSC4.43
Resolution	600 TV lines (PVM-1354Q) 450 TV lines (PVM-1351Q)
Aperture correction	0dB – +6.0dB
Frequency response	LINE 9.0MHz (–3 dB) RGB 10.0 MHz (–3 dB)
Synchronization	AFC time constant 1.0 msec.

Picture performance

Normal scan	7% over scan of CRT effective screen area
Underscan	5% underscan of CRT effective screen area
H. linearity	Less than 8.0% (typical)
V. linearity	Less than 7.0% (typical)
Convergence	Central area: 0.6 mm (typical) Peripheral area: 0.8 mm (typical)
Raster size stability	H: 1.0%, V: 1.5%
High voltage regulation	3.5%
CRT	SMPTE-C phosphor (PVM-1354Q) P22 phosphor (PVM-1351Q)
Color temperature	6,500K/9,300K (+8MPCD), selectable USER (3200K-10000K, factory setting is 6500K)

Inputs and Outputs

Inputs	Y/C IN: 4-pin mini DIN connector (See the pin assignment on the next page.) VIDEO IN:BNC connector 1Vp-p ±6dB, sync negative AUDIO IN: phono jack, –5 dBs, more than 47k ohms R/R-Y, G/Y, B/B-Y IN: BNC connector R, G, B channels: 0.7 Vp-p, ±6dB Sync on green: 0.3 Vp-p, negative, 75 ohms terminated R-Y, B-Y channels: 0.7 Vp-p, ±6 dB Y channel: 0.7 Vp-p, ±6dB (Standard color bar signal of 75% chrominance) EXT SYNC IN: BNC connector Composite sync 4 Vp-p, ±6 dB, negative
Loop-through outputs	Y/C OUT: 4-pin mini DIN connector VIDEO OUT: BNC connector, 75 ohms terminated AUDIO OUT: phono jack R/R-Y, G/Y, B/B-Y OUT: BNC connector, 75 ohms terminated EXT SYNC OUT: BNC connector, 75 ohms terminated
Remote input	REMOTE: 20-pin connector (See the pin assignment on the next page.)
Speaker output	Output level 0.8 W

– Continued on page 2 –

MICROFILM

TRINITRON® COLOR VIDEO MONITOR

SONY®

General

Power consumption	Approx. 99 Wh (incl. SDI) Approx. 90 Wh (without. SDI)
Power requirements	120 V AC, 50/60 Hz
Operating temperature range	0 –35 °C
Storage temperature range	–10 – +40 °C
Humidity	0 – 90%
Dimensions	Approx. 346 × 340 × 411.5 mm (w/h/d) (13 5/8 × 13 1/2 × 16 1/4 inches) not incl. projecting parts and controls
Mass	Approx. 16.7 kg (36 lb 14 oz)
Accessory supplied	AC power cord (1) AC plug holder (1) Tally label (1) Cable with a 20-pin connector (1)

Pin assignment

Y/C IN connector (4-pin mini DIN)

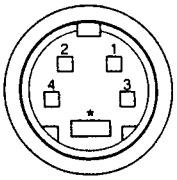

Pin No.	Signal	Description
1	Y-input	1 Vp-p, sync negative, 75 ohms
2	CHROMA sub-carrier-input	300 mVp-p, burst Delay time between Y and C: within 0±100 nsec., 75 ohms
3	GND for Y-input	GND
4	GND for CHROMA-input	GND

REMOTE connector (20-pin)

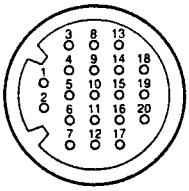

Pin No.	Signal	Wire color
1	Blue only	Brown
2	H/V DELAY	Red
3	MAIN/SUB*	Orange
4	EXT SYNC	Yellow
5	DEGAUSS	Green
6	R ch ON/OFF*	Blue
7	TALLY	Purple
8	LINE B	Grey
9	GND	White
10	GND	Black
11	GND	Pink
12	GND	Light Blue
13	LINE A	Spiral Orange
14	LINE/RGB	Spiral Yellow
15	GND	Spiral Green
16	L ch ON/OFF*	Spiral Blue
17	REMOTE	Spiral Purple
18	LINE C	Spiral Grey
19	UNDER SCAN	Spiral Pink
20	16:9	Spiral Light Blue

(* For digital audio control)

3386

SPECIFICATIONS (PVM-1350)

Video signal

Color system	NTSC
Resolution	450 TV lines
Aperture correction	0 dB – +6.0 dB
Frequency response	LINE 9.0 MHz (–3 dB) RGB 10.0 MHz (–3 dB)
Synchronization	AFC time constant 1.0 msec.

Picture performance

Normal scan	7% over scan of CRT effective screen area
H. linearity	Less than 8.0% (typical)
V. linearity	Less than 7.0% (typical)
Raster size stability	H: 1.0%, V: 1.5%
High voltage regulation	3.5%
CRT	P22 phosphor
Color temperature	6,500K

Inputs and Outputs

Inputs	Y/C IN: 4-pin mini DIN connector (See the pin assignment below.) VIDEO IN: BNC connector 1Vp-p ±6 dB, sync negative AUDIO IN: phono jack, –5 dBs, more than 47k ohms R, G, B IN: BNC connector 0.7 Vp-p, ±6 dB Sync on green: 0.3 Vp-p, negative, 75 ohms terminated RGB SYNC IN: BNC connector Composite sync 4 Vp-p, ±6 dB, negative
Loop-through outputs	Y/C OUT: 4-pin mini DIN connector VIDEO OUT: BNC connector, 75 ohms terminated AUDIO OUT: phono jack
Speaker output	Output level 0.8 W

General

Power consumption	Approx. 90 Wh
Power requirements	120 V AC, 50/60 Hz
Operating temperature range	0 – 35 °C
Storage temperature range	–10 – +40 °C
Humidity	0 – 90%
Dimensions	Approx. 346 × 340 × 411.5 mm (w/h/d) (13 5/8 × 13 1/2 × 16 1/4 inches) not incl. projecting parts and controls
Mass	Approx. 16.7 kg (36 lb 14 oz)
Accessory supplied	AC power cord (1) AC plug holder (1)

Pin assignment

Y/C IN connector (4-pin mini DIN)

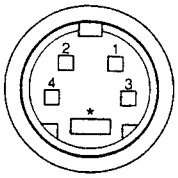

Pin No.	Signal	Description
1	Y-input	1 Vp-p, sync negative, 75 ohms
2	CHROMA sub-carrier-input	300 mVp-p, burst Delay time between Y and C: within 0±100 nsec., 75 ohms
3	GND for Y-input	GND
4	GND for CHROMA-input	GND

Design and specifications are subject to change without notice.

SAFETY CHECK-OUT
(US Model Only)

After correcting the original service problem, perform the following safety checks before releasing the set to the customer:

1. Check the area of your repair for unsoldered or poorly-soldered connections. Check the entire board surface for solder splashes and bridges.
2. Check the interboard wiring to ensure that no wires are "pinched" or contact high-wattage resistors.
3. Check that all control knobs, shields, covers, ground straps, and mounting hardware have been replaced. Be absolutely certain that you have replaced all the insulators.
4. Look for unauthorized replacement parts, particularly transistors, that were installed during a previous repair. Point them out to the customer and recommend their replacement.
5. Look for parts which, though functioning, show obvious signs of deterioration. Point them out to the customer and recommend their replacement.
6. Check the line cord for cracks and abrasion. Recommend the replacement of any such line cord to the customer.
7. Check the condition of the monopole antenna (if any).
   Make sure the end is not broken off, and has the plastic cap on it. Point out the danger of impalement on a broken antenna to the customer, and recommend the antenna's replacement.
8. Check the B+ and HV to see they are at the values specified. Make sure your instruments are accurate; be suspicious of your HV meter if sets always have low HV.
9. Check the antenna terminals, metal trim, "metallized" knobs, screws, and all other exposed metal parts for AC leakage. Check leakage as described below.

LEAKAGE TEST

The AC leakage from any exposed metal part to earth ground and from all exposed metal parts to any exposed metal part having a return to chassis, must not exceed 0.5 mA (500 microampers). Leakage current can be measured by any one of three methods.

1. A commercial leakage tester, such as the Simpson 229 or RCA WT-540A. Follow the manufacturers' instructions to use these instruments.
2. A battery-operated AC milliammeter. The Data Precision 245 digital multimeter is suitable for this job.
3. Measuring the voltage drop across a resistor by means of a VOM or battery-operated AC voltmeter. The "limit" indication is 0.75 V, so analog meters must have an accurate low-voltage scale. The Simpson 250 and Sanwa SH-63Trd are examples of a passive VOM that is suitable. Nearly all battery operated digital multimeters that have a 2 V AC range are suitable. (See Fig. A)

HOW TO FIND A GOOD EARTH GROUND

A cold-water pipe is guaranteed earth ground; the cover-plate retaining screw on most AC outlet boxes is also at earth ground. If the retaining screw is to be used as your earth-ground, verify that it is at ground by measuring the resistance between it and a cold-water pipe with an ohmmeter. The reading should be zero ohms. If a cold-water pipe is not accessible, connect a 60–100 watts trouble light (not a neon lamp) between the hot side of the receptacle and the retaining screw. Try both slots, if necessary, to locate the hot side of the line, the lamp should light at normal brilliance if the screw is at ground potential. (See Fig. B)

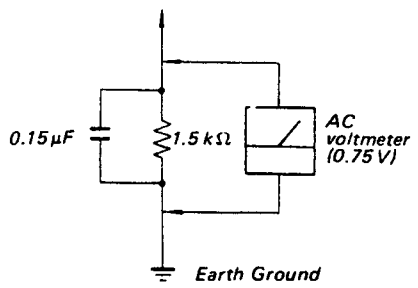

Fig. A. Using an AC voltmeter to check AC leakage.

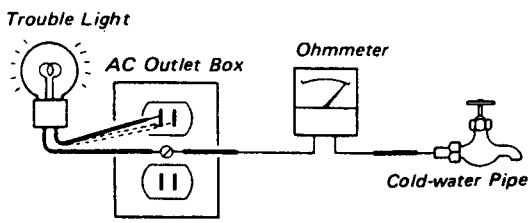

Fig. B. Checking for earth ground.

TABLE OF CONTENTS

(CAUTION)

SHORT CIRCUIT THE ANODE OF THE PICTURE TUBE AND THE ANODE CAP TO THE METAL CHASSIS, CRT SHIELD, OR CARBON PAINTED ON THE CRT, AFTER REMOVING THE ANODE.

(ATTENTION)

APRES AVOIR DECONNECTE LE CAP DE L'ANODE, COURTCIRCUITER L'ANODE DU TUBE CATHODIQUE ET CELUI DE L'ANODE DU CAP AU CHASSIS METALLIQUE DE L'APPAREIL, OU AU COUCHE DE CARBONE PEINTES UR LE TUBE CATHODIQUE OU AU BLINDAGE DU TUBE CATHODIQUE.

WARNING!!

AN ISOLATION TRANSFORMER SHOULD BE USED DURING ANY SERVICE TO AVOID POSSIBLE SHOCK HAZARD, BECAUSE OF LIVE CHASSIS.
THE CHASSIS OF THIS RECEIVER IS DIRECTLY CONNECTED TO THE AC POWER LINE.

ATTENTION!!

AFIN D'EVITER TOUT RISQUE D'ELECTROCUTION PROVENANT D'UN CHÁSSIS SOUS TENSION, UN TRANSFORMATEUR D'ISOLEMENT DOIT ETRE UTILISÉ LORS DE TOUT DÉPANNAGE.
LE CHÁSSIS DE CE RÉCEPTEUR EST DIRECTE MENT RACCORDÉ Á L'ALIMENTATION SECTEUR.

SAFETY-RELATED COMPONENT WARNING !!

COMPONENTS IDENTIFIED BY SHADING AND MARK ⚠ ON THE SCHEMATIC DIAGRAMS, EXPLODED VIEWS AND IN THE PARTS LIST ARE CRITICAL TO SAFE OPERATION. REPLACE THESE COMPONENTS WITH SONY PARTS WHOSE PART NUMBERS APPEAR AS SHOWN IN THIS MANUAL OR IN SUPPLEMENTS PUBLISHED BY SONY. CIRCUIT ADJUSTMENTS THAT ARE CRITICAL TO SAFE OPERATION ARE IDENTIFIED IN THIS MANUAL. FOLLOW THESE PROCEDURES WHENEVER CRITICAL COMPONENTS ARE REPLACED OR IMPROPER OPERATION IS SUSPECTED.

ATTENTION AUX COMPOSANTS RELATIFS ÁLA SÉCURITÉ!!

LES COMPOSANTS IDENTIFIÉS PAR UNE TRAME ET PAR UNE MAPQUE ⚠ SUR LES SCHÉMAS DE PRINCIPE, LES VUES EXPLOSÉES ET LES LISTES DE PIECES CONT D'UNE IMPORTANCE CRITIQUE POUR LA SÉCURITÉ DU FONCTIONNEMENT. NE LES REMPLACER QUE PAR DES COMPOSANTS SONY DONT LE NUMÉRO DE PIÉCE EST INDIQUÉ DANS LE PRÉSENT MANUEL OU DANS DES SUPPLÉMENTS PUBLIÉS PAR SONY. LES RÉGLAGES DE CIRCUIT DONT L'IMPORTANCE EST CRITIQUE POUR LA SÉCURITÉ DU FONCTIONNEMENT SONT IDENTIFIES DANS LE PRÉSENT MANUEL. SUIVRE CES PROCÉDURES LORS DE CHAQUE REMPLACEMENT DE COMPOSANTS CRITIQUES, OU LORSQU'UN MAUVAIS FONCTIONNE MENT EST SUSPECTÉ.

SECTION 1
GENERAL

The operating instructions mentioned here are partial abstracts from the Operating Instruction Manual. The page numbers of the Operating Instruction Manual remein as in the manual.

1-1. GENERAL OF PVM-1351Q/1354Q

Features

HR (High Resolution) Trinitron picture tube
HR Trinitron tube provides a high resolution picture. Horizontal resolution is more than 600 (PVM-1354Q/1954Q) or 450 (PVM-1351Q) TV lines at the center of the picture.

Four color systems available
The monitor can display PAL, SECAM, $NTSC_{3.58}$ and $NTSC_{4.43}$* signals. The appropriate color system is selected automatically.

* A signal of $NTSC_{4.43}$ is used for playing back NTSC recorded video cassettes with a video tape recorder/ player especially designed for use with this system.

Blue only mode
In the blue only mode, an apparent monochrome display is obtained with all three cathodes driven with a blue signal. This facilitates color saturation and phase adjustments and observation of VCR noise.

Analog RGB/component input connectors
Analog RGB or component (Y, R-Y and B-Y) signals from video equipment can be input through these connectors.

Y/C input connectors
The video signal, split into the chrominance signal (C) and the luminance signal (Y), can be input through this connector, eliminating the interference between the two signals, which tends to occur in a composite video signal, assuring video quality.

Beam current feedback circuit
The built-in beam current feedback circuit assures stable white balance.

Comb filter
When NTSC video signals are received, a comb filter activates to increase the resolution, resulting in fine picture detail without color spill or color noise.

Automatic termination (connector with ∧∧ mark only)
The input connector is terminated at 75 ohms inside when no cable is connected to the loop-through output connectors. When a cable is connected to an output connector, the 75-ohms termination is automatically released.

Underscan mode
The signal normally scanned outside of the screen can be monitored in the underscan mode.

Note

When the monitor is in the underscan mode, the dark RGB scanning lines may appear on the top edge of the screen. These are caused by an internal test signal, rather than the input signal.

Horizontal/vertical delay mode
The horizontal and vertical sync signals can be checked simultaneously in the H/V delay mode.

External sync input
When the EXT SYNC selector is in the on position, the monitor can be operated on the sync signal supplied from an external sync generator.

Auto/manual degaussing
Degaussing of the screen can be performed automatically when the power is turned on, or manually by pressing the DEGAUSS button.

On-screen menus
You can set color temperature, CHROMA SET UP, and other settings by using the on-screen menus.

Five menu languages
You can select the menu language from among the five languages on the menu.

EIA standard 19-inch rack mounting
By using an MB-502B (for PVM-1354Q/1351Q) or SLR-103 (for PVM-1954Q) mounting bracket (not supplied), the monitor can be mounted in an EIA standard 19-inch rack. For details on mounting, see the instruction manual of the mounting bracket kit.

SDI (Serial Digital Interface) kit
By using SDI kit, the monitor can display SMPTE 259M 4:2:2 serial digital signal from a digital VTR. (ex. Sony 4:2:2 VTR)

SDI kit: 4:2:2 digital video board
Digital audio board

Location and function of parts and controls

Front panel

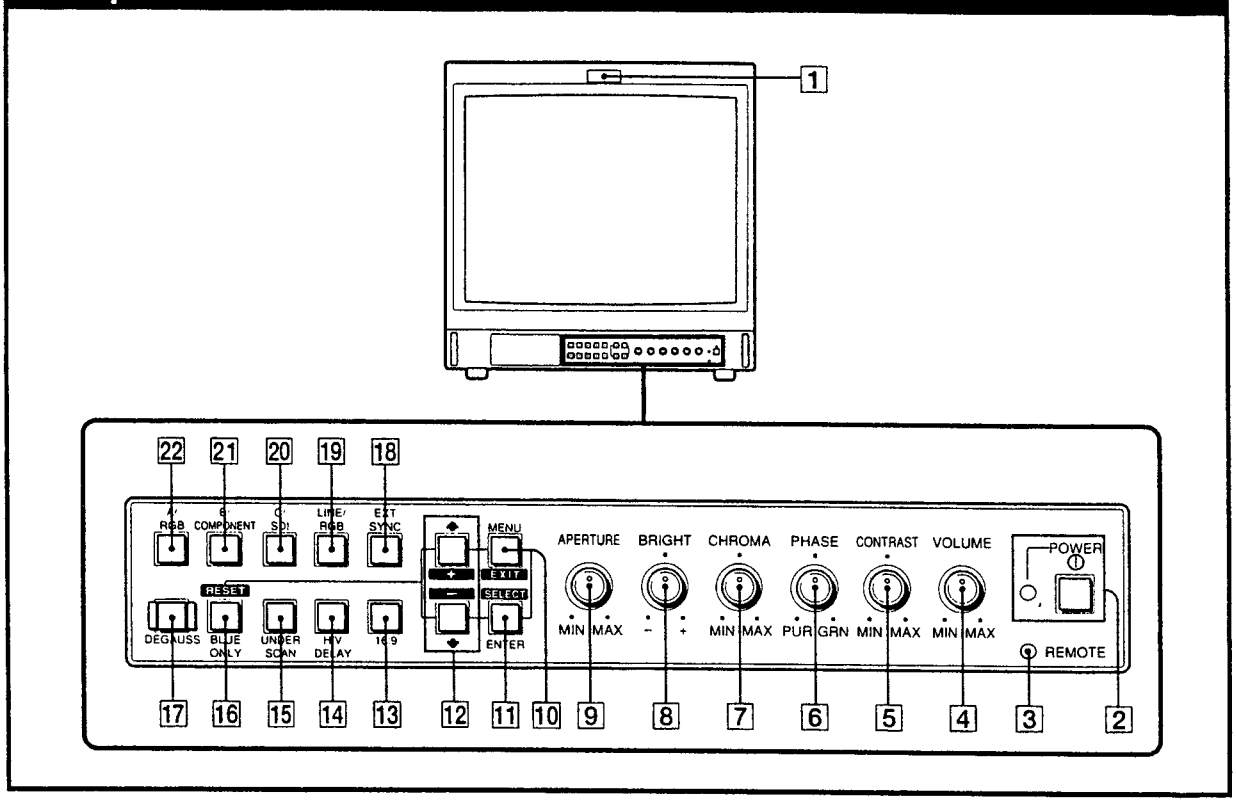

1 Tally lamp
Lights up when the video camera connected to this monitor is selected, indicating that the picture is being recorded.

2 POWER switch and indicator
Depress to turn the monitor on. The indicator will light up in green.

3 REMOTE indicator
Lights up when you set USER PRESET to ON in the menu, or when you connect a supplied cable to REMOTE connector (No. 17 pin is ground). The controls on the front panel do not work when this indicator lights up.

4 VOLUME control
Turn this control clockwise or counterclockwise to obtain the desired volume.

5 CONTRAST control
Turn clockwise to make the contrast higher and counterclockwise to make it lower.

6 PHASE control
This control is effective only for the NTSC3.58 and NTSC4.43 color systems. Turn clockwise to make the skin tones greenish and counterclockwise to make them purplish.

7 CHROMA control
Turn clockwise to make the color intensity higher and counterclockwise to make it lower.

8 BRIGHT (brightness) control
Turn clockwise for more brightness and counterclockwise for less.

9 APERTURE control
Turn clockwise for more sharpness and counterclockwise for less.

Note
The APERTURE, CHROMA, PHASE control settings have no effect on the pictures of RGB signals.

10 MENU (EXIT) button
Press to make the menu appear. Press to return to the previous screen in the menu.

11 ENTER (SELECT) button
Press to decide a selected item in the menu.

12 ↑ (+)/ ↓ (–) buttons
Press to move the cursor (▶) or adjust selected value in the menu.

13 16:9 selector
Press (light on) for the signal of 16:9 picture.

14 H/V DELAY selector
Press (light on) to observe the horizontal and vertical sync signals at the same time.
The horizontal sync signal is displayed in the left quarter of the screen; the vertical sync signal is displayed near the center of the screen.

15 UNDER SCAN selector
Press (light on) for underscanning. The display size is reduced by approximately 5% so that four corners of the raster are visible.

16 BLUE ONLY selector
RESET button
Press (light on) to turn off the red and green signals. A blue signal is displayed as an apparent monochrome picture on the screen. This facilitates "chroma" and "phase*" control adjustments and observation of VCR noise.
* "Phase" control adjustment is effective only for the NTSC signals.
Press to reset the setting in the menu.

17 DEGAUSS button
Press this button momentarily. The screen will be demagnetized. Wait for 10 minutes or more before activating this button again.

18 EXT SYNC (external sync) selector
Keep this button in the off position (light off) to operate the monitor on the sync signal from the displayed video signal.
Keep this button in the on position (light on) to operate the monitor on an external sync signal fed through the EXT SYNC connector on the rear panel.

19 LINE/RGB input selector
Select the program to be monitored. Keep this button in the off position (light off) to feed a signal through the LINE A, LINE B or LINE C connectors. Keep this button in the on position (light on) to feed a signal through the RGB connectors.

20 C/SDI selector
When the LINE/RGB input selector is set to LINE (light off), press this button (light on) to feed a signal through the LINE C connectors.
When the LINE/RGB input selector is set to RGB (light on), press this button (light on) to feed the SDI signal (optional board is needed).

21 B/COMPONENT selector
When the LINE/RGB input selector is set to LINE (light off), press this button (light on) to feed a signal through the LINE B connectors.
When the LINE/RGB input selector is set to RGB (light on), press this button (light on) to feed the component signal.

22 A/RGB selector
When the LINE/RGB input selector is set to LINE (light off), press this button (light on) to feed a signal through the LINE A connectors.
When the LINE/RGB input selector is set to RGB (light on), press this button (light on) to feed the RGB signal.

Location and function of parts and controls

Rear panel

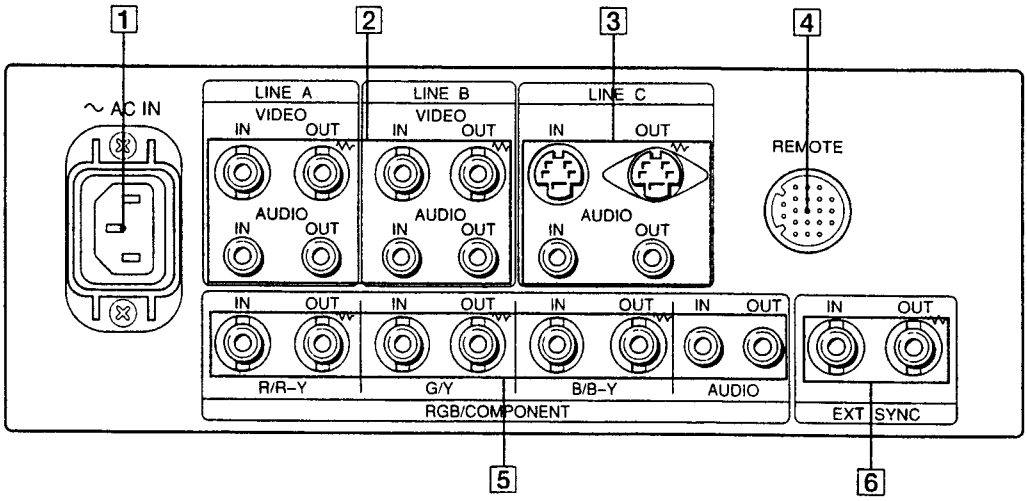

(The ∧∧ mark indicates automatic termination.)

1 AC IN socket
Connect the supplied AC power cord to this socket and to a wall outlet.

2 LINE A, LINE B connectors
Two groups (A and B) of line input connectors for the composite video and audio signals and their loop-through output connectors.
To monitor the input signal fed through these connectors, keep the LINE/RGB selector in the LINE position (light off) and press the A/RGB or B/COMPONENT selector (light on) on the front panel.

VIDEO IN (BNC)
Connect to the video output of a video equipment, such as a VCR or a color video camera. For a loop-through connection, connect to the video output of another monitor.
VIDEO OUT (BNC)
Loop-through output of the VIDEO IN connector. Connect to the video input for a VCR or another monitor.
When the cable is connected to this connector, the 75-ohms termination of the input is automatically released, and the signal input to the VIDEO IN connector is output from this connector.
AUDIO IN (phono jack)
Connect to the audio output of a VCR or to a microphone via a suitable microphone amplifier. For a loop-through connection, connect to the audio output of another monitor.
AUDIO OUT (phono jack)
Loop-through output of the AUDIO IN jack. Connect to the audio input of a VCR or another monitor.

3 LINE C connectors
Y/C IN (4pin mini DIN)
Connect to the Y/C separate output of a video camera, VCR or other video equipment.
Y/C OUT (4pin mini DIN)
Loop-through output of the Y/C IN connector. Connect to the Y/C separate input of a VCR or another monitor. When the cable is connected to this connector, the 75-ohms termination of the input is automatically released, and the signal input to the Y/C IN connector is output from this connector.
AUDIO IN (phono jack)
Connect to the audio output of a VCR or a microphone (through a suitable microphone amplifier).
AUDIO OUT (phono jack)
Loop-through output of the AUDIO IN connector. Connect to the audio input of a VCR or another monitor.

4 REMOTE connector (20pin)
Connect to the tally output of a control console, special-effect generator, etc. The tally lamp on the front panel will be turned on and off by the connected equipment. This connector can be used for connecting a remote controller. For the pin assignment of this connector, see "Specifications" on page 10.

5 RGB/COMPONENT connectors

RGB signal or component signal input connectors and their loop-through output connectors.
To monitor the input signal fed through these connectors, keep the LINE/RGB selector in the RGB position (light on), and press the A/RGB or B/COMPONENT selector (light on) on the front panel.

R/R-Y IN, G/Y IN, B/B-Y IN (BNC)

When the EXT SYNC selector on the front panel is in the off position (light off), the monitor operates on the sync signal from the G/Y channel.

To monitor the RGB signal

Connect to the analog RGB signal outputs of a video camera.

To monitor the component signal

Connect to the R-Y/Y/B-Y component signal outputs of a Sony Betacam video camera.

R/R-Y OUT, G/Y OUT, B/B-Y OUT (BNC)

Loop-through outputs of the R/R-Y IN, G/Y IN, B/B-Y IN connectors

For RGB signal

Connect to the analog RGB signal inputs of a video printer or another monitor.

For component signal

Connect to the R-Y/Y/B-Y component signal inputs of a Betacam video recorder.

When the cables are connected to these connectors, the 75-ohms termination of the inputs is automatically released, and the signal inputs to the R/R-Y IN, G/Y IN, B/B-Y IN connectors are output from these connectors.

AUDIO IN (phono jack)

Connect to the audio output of video equipment when the analog RGB or component signal is input.

AUDIO OUT (phono jack)

Loop-through outputs of the AUDIO IN connector.

6 EXT SYNC (external sync) connectors

To use the sync signal fed through this connector, press the EXT SYNC selector (light on).

IN (BNC)

When this monitor operates on an external sync signal, connect the reference signal from a sync generator to this connector.

OUT (BNC)

Loop-through output of the EXT SYNC IN connector. Connect to the external sync input of video equipment to be synchronized with this monitor.
When the cable is connected to this connector, the 75-ohms termination of the input is released, and the signal input to the IN connector is output from this connector.

Using on-screen menus

The flow chart shows the different levels of on-screen menus that you can use to make various adjustments and settings. The boxed number is for instructions on the next page.

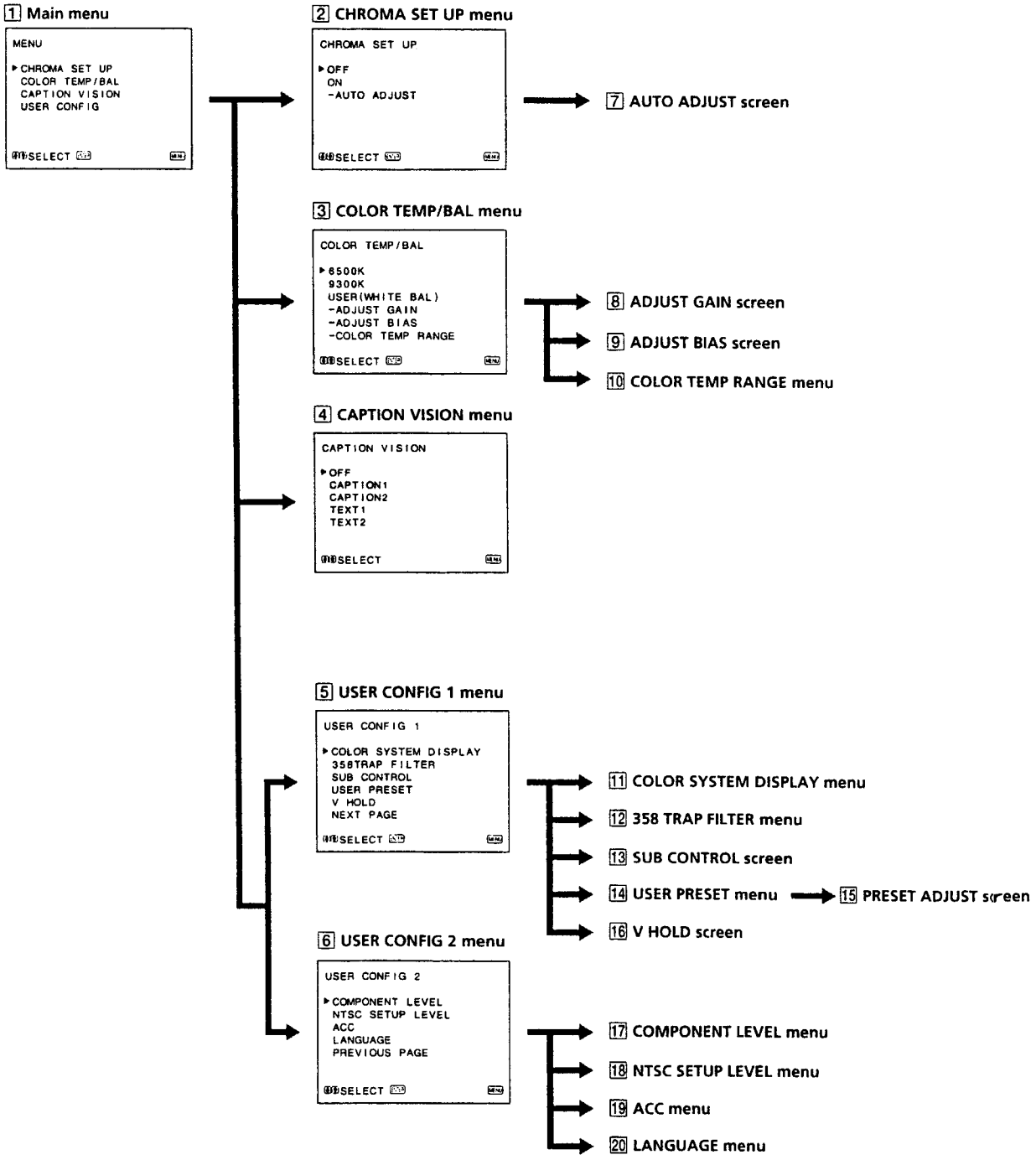

Operating through menus

There are five buttons for menu operations on the front of the monitor. To display the main menu, first press MENU. The buttons you can use appear at the bottom of the menu screen.

Functions of the buttons

Button	To select menu item	To adjust menu item selected
MENU EXIT	return to the previous menu	return to the previous menu
ENTER SELECT	decide a selected item	select an item
↑ +	move the cursor (▶) upwards	increase selected value
↓ −	move the cursor (▶) downwards	decrease selected value
RESET		reset current adjustment value to the factory setting

(The above items in white type correspond to the marks in the menu.)

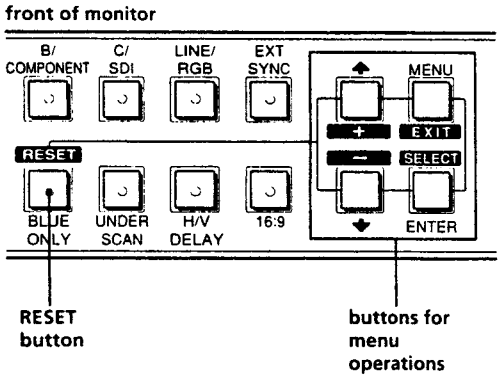

1 Main menu
Select an item and press ENTER to go to the following menu.

2 CHROMA SET UP menu
Set to ON to adjust the internal decoder for CHROMA and PHASE (NTSC signal only) after AUTO ADJUST (7). [OFF]

3 COLOR TEMP/BAL menu
Select the color temperature from among 6500K, 9300K and USER. USER is set to 6500K in the factory setting. You can adjust or change the color temperature in USER mode (a measuring instrument is needed). [6500K]

4 CAPTION VISION menu
The monitor can display the signal with Caption Vision. To display it, select the caption type in this menu. [OFF]

5 USER CONFIG 1 menu
Select an item to adjust. To go to the USER CONFIG 2 menu, select NEXT PAGE.

6 USER CONFIG 2 menu
Select an item to adjust. To go to the USER CONFIG 1 menu select PREVIOUS PAGE.

7 AUTO ADJUST screen
Select the color bar signal (full, SMPTE, EIA) and press ENTER to start auto adjusting for CHROMA SET UP (NTSC signal only).

8 ADJUST GAIN screen
Adjust GAIN in USER mode.

9 ADJUST BIAS screen
Adjust BIAS in USER mode.

10 COLOR TEMP RANGE menu
Select the color temperature range in USER mode. [5000K-10000K]

11 COLOR SYSTEM DISPLAY menu
Select the color system display mode. In AUTO, the kind of color system being used appears on the screen each time you change the signal input. [AUTO]

12 358 TRAP FILTER menu
Color spill or color noise may be eliminated if you select ON ($NTSC_{3.58}$ signal only). [OFF]

13 SUB CONTROL screen
You can finely adjust the controls on the front panel. CONTRAST, BRIGHT, CHROMA and PHASE control has a click at the center of its adjustment range. You can adjust the setting of the click position with this feature.

14 USER PRESET menu
You can preset each control to a desired level and set it. If you set USER PRESET to ON, the REMOTE indicator lights up and the controls on the front panel do not work. The monitor operates with the internal memory settings. For adjustment, select PRESET ADJUST. [OFF]

15 PRESET ADJUST screen
Adjust CONTRAST, BRIGHT, CHROMA, PHASE, VOLUME, APERTURE in USER PRESET.

16 V HOLD screen
Adjust the vertical hold if the picture rolls vertically. When you cannot read the display, select the input that is not connected.

17 COMPONENT LEVEL menu
Select the component level from among three modes.
N10/SMPTE for 100/0/100/0 signal
BETA 7.5 for 100/7.5/75/7.5 signal
BETA 0 for 100/0/75/0 signal
[BETA 7.5]

18 NTSC SETUP LEVEL menu
Select the NTSC setup level from two modes. The 7.5 setup level is mainly used in north America. The 0 setup level is mainly used in Japan. [7.5]

19 ACC menu
Set ACC (Auto Color Control) circuit on or off. When the fine adjustment is needed, set ACC to OFF. Normally set it to ON. [ON]

20 LANGUAGE menu
You can select the menu language from among the five languages (English, German, French, Italian, Spanish) on the menu. [ENGLISH]

([ ] indicates the factory setting position.)

Power sources

House current

Connect the AC power cord (supplied) to the AC IN socket and to a wall outlet.

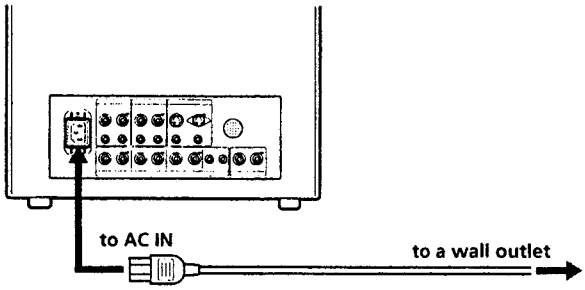

To connect an AC power cord securely with an AC plug holder

1

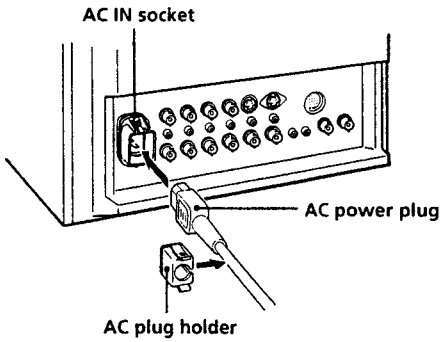

Plug the power cord into the AC IN socket. Then, attach the AC plug holder (supplied) on top of the AC power cord.

2

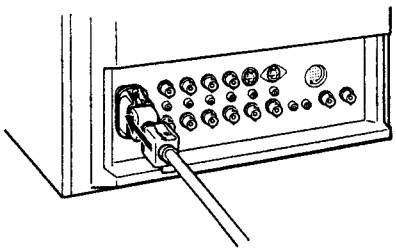

Slide the AC plug holder over the cord until it connects with the attached holder.

To remove the AC power cord

Pull out AC plug holder by squeezing the left and right sides.

8

The operating instructions mentioned here are partial abstracts from the Operating Instruction Manual. The page numbers of the Operating Instruction Manual remein as in the manual.

Features

Fine pitch Trinitron picture tube
The fine pitch Trinitron tube provides a high resolution picture. Horizontal resolution is more than 450 TV lines at the center of the picture.

Analog RGB input connectors
Analog RGB signals from video equipment can be input through these connectors.

Y/C input connectors
The video signal, split into the chrominance signal (C) and the luminance signal (Y), can be input through this connector, eliminating the interference between the two signals, which tends to occur in a composite video signal, assuring video quality.

Beam current feedback circuit
The built-in beam current feedback circuit assures stable white balance.

Comb filter
When NTSC video signals are received, a comb filter activates to increase the resolution, resulting in fine picture detail without color spill or color noise.

Automatic termination (connector with ∧∧ mark only)
The input connector is terminated at 75 ohms inside when no cable is connected to the loop-through output connectors. When a cable is connected to an output connector, the 75-ohms termination is automatically released.

Blue only mode
In the blue only mode, an apparent monochrome display is obtained with all three cathodes driven with a blue signal. This facilitates color saturation and phase adjustments and observation of VCR noise.

Auto/manual degaussing
Degaussing of the screen can be performed automatically when the power is turned on, or manually by pressing the DEGAUSS button.

On-screen menus
You can set CHROMA SET UP and other settings by using the on-screen menus.

Five menu languages
You can select the menu language from among the five languages on the menu.

EIA standard 19-inch rack mounting
By using an MB-502B mounting bracket (not supplied), the monitor can be mounted in an EIA standard 19-inch rack. For details on mounting, see the instruction manual of the mounting bracket kit.

Location and function of parts and controls

Front panel

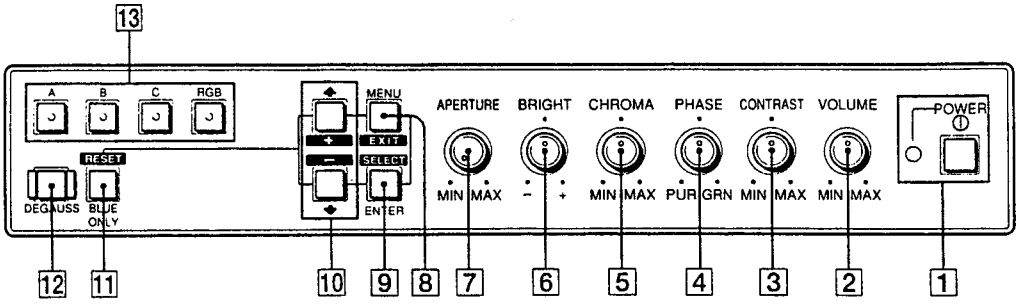

1 **POWER switch and indicator**
Depress to turn the monitor on. The indicator will light up in green.

2 **VOLUME control**
Turn this control clockwise or counterclockwise to obtain the desired volume.

3 **CONTRAST control**
Turn clockwise to make the contrast higher and counterclockwise to make it lower.

4 **PHASE control**
Turn clockwise to make the skin tones greenish and counterclockwise to make them purplish.

5 **CHROMA control**
Turn clockwise to make the color intensity higher and counterclockwise to make it lower.

6 **BRIGHT (brightness) control**
Turn clockwise for more brightness and counterclockwise for less.

7 **APERTURE control**
Turn clockwise for more sharpness and counterclockwise for less.

Note

The APERTURE, CHROMA, PHASE control settings have no effect on the pictures of RGB signals.

8 **MENU (EXIT) button**
Press to make the menu appear. Press to return to the previous screen in the menu.

9 **ENTER (SELECT) button**
Press to decide a selected item in the menu.

10 **↑ (+)/ ↓ (–) buttons**
Press to move the cursor (▶) or adjust selected value in the menu.

11 **BLUE ONLY selector**
RESET button
Press (light on) to turn off the red and green signals. A blue signal is displayed as an apparent monochrome picture on the screen. This facilitates "chroma" and "phase" control adjustments and observation of VCR noise.
Press to reset the setting in the menu.

12 **DEGAUSS button**
Press this button momentarily. The screen will be demagnetized. Wait for 10 minutes or more before activating this button again.

13 **Input select buttons**
Press (light on) to select the program to be monitored.
A: for a signal fed through the LINE A connector.
B: for a signal fed through the LINE B connectors
C: for a signal fed through the LINE C connectors
RGB: for a signal fed through the RGB connector.

Rear panel

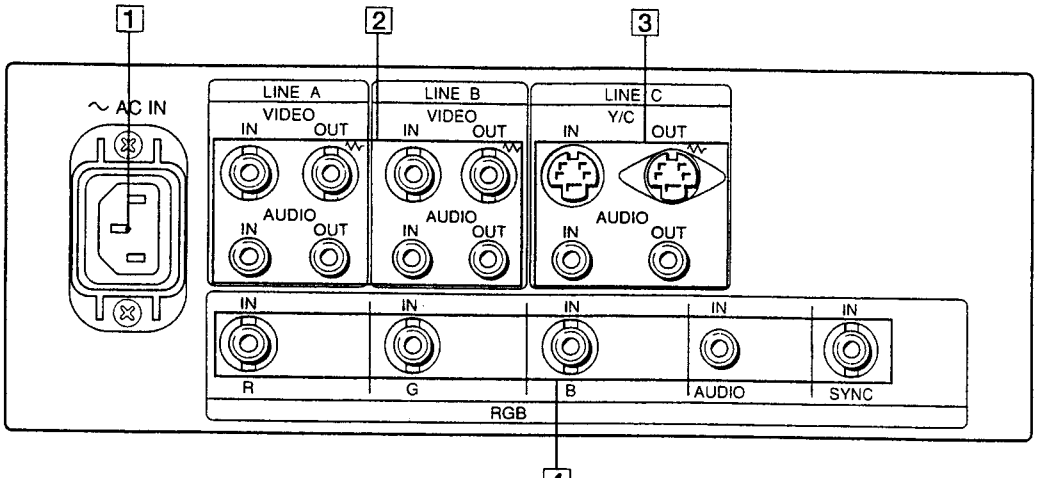

(The ∧∧ mark indicates automatic termination.)

1 AC IN socket
Connect the supplied AC power cord to this socket and to a wall outlet.

2 LINE A, LINE B connectors
Two groups (A and B) of line input connectors for the composite video and audio signals and their loop-through output connectors.
To monitor the input signal fed through these connectors, press the A or B button (light on) on the front panel.

VIDEO IN (BNC)
Connect to the video output of video equipment, such as a VCR or a color video camera. For a loop-through connection, connect to the video output of another monitor.
VIDEO OUT (BNC)
Loop-through output of the VIDEO IN connector. Connect to the video input for a VCR or another monitor.
When the cable is connected to this connector, the 75-ohms termination of the input is automatically released, and the signal input to the VIDEO IN connector is output from this connector.
AUDIO IN (phono jack)
Connect to the audio output of a VCR or to a microphone via a suitable microphone amplifier. For a loop-through connection, connect to the audio output of another monitor.
AUDIO OUT (phono jack)
Loop-through output of the AUDIO IN jack. Connect to the audio input of a VCR or another monitor.

3 LINE C connectors
Y/C IN (4pin mini DIN)
Connect to the Y/C separate output of a video camera, VCR or other video equipment.
Y/C OUT (4pin mini DIN)
Loop-through output of the Y/C IN connector. Connect to the Y/C separate input of a VCR or another monitor. When the cable is connected to this connector, the 75-ohms termination of the input is automatically released, and the signal input to the Y/C IN connector is output from this connector.
AUDIO IN (phono jack)
Connect to the audio output of a VCR or a microphone (through a suitable microphone amplifier).
AUDIO OUT (phono jack)
Loop-through output of the AUDIO IN connector. Connect to the audio input of a VCR or another monitor.

4 RGB IN connectors
Connect to the analog RGB outputs of a video camera. To monitor the input signal fed through these connectors, press RGB button (light on) on the front panel.

R IN, G IN, B IN (BNC)
When you set RGB SYNC to SYNC ON G in the menu, the monitor operates on the sync signal from the G channel.
AUDIO IN (phono jack)
Connect to the audio output of video equipment when the analog RGB signal is input.
SYNC IN (BNC)
To use the sync signal fed through this connector, set RGB SYNC to EXT SYNC in the menu.

Using on-screen menus

The flow chart shows the different levels of on-screen menus that you can use to make various adjustments and settings. The boxed number is for instructions on the next page.

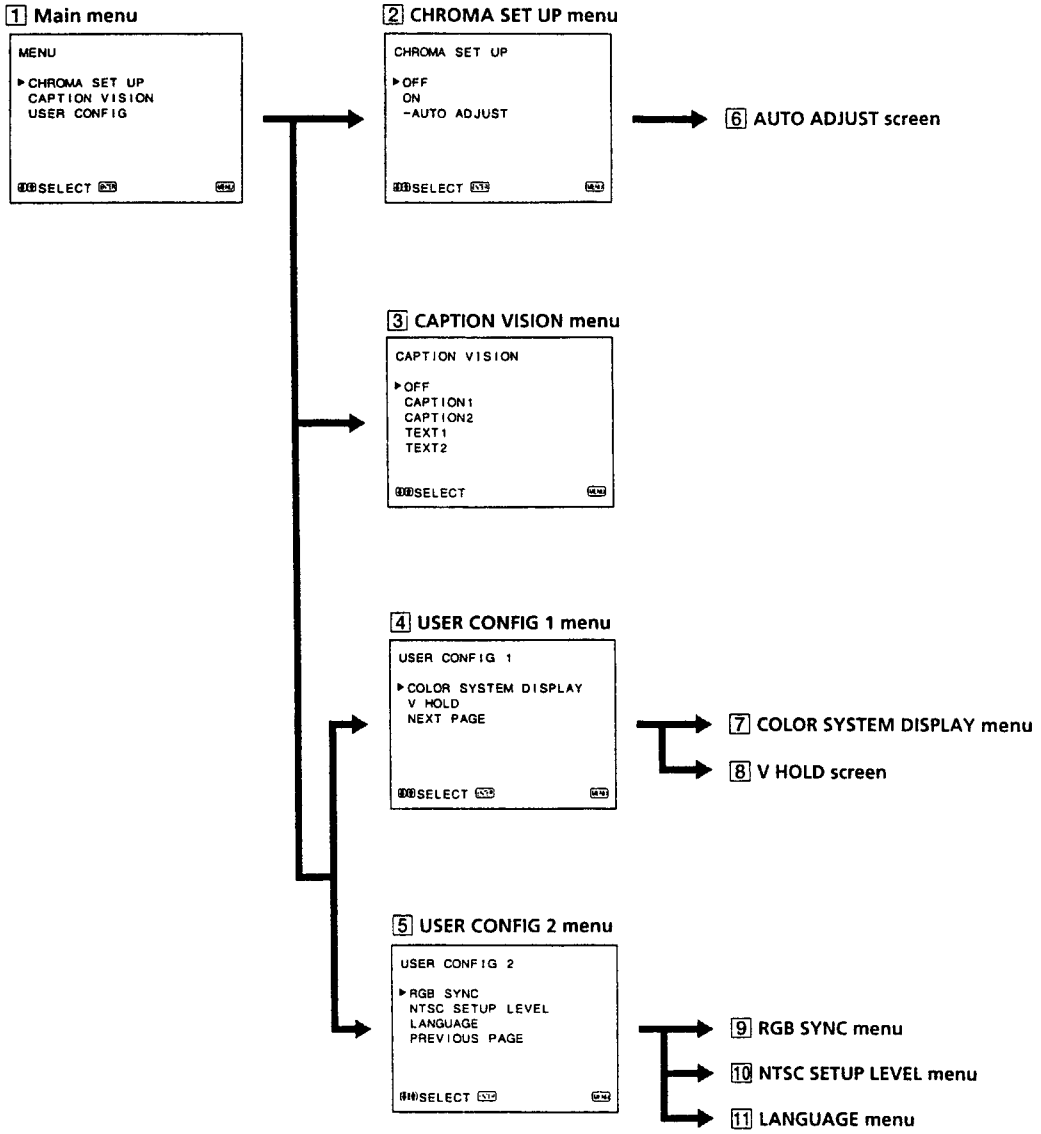

4

Operating through menus

There are five buttons for menu operations on the front of the monitor. To display the main menu, first press MENU. The buttons you can use appear at the bottom of the menu screen.

Functions of the buttons

Button	To select menu item	To adjust menu item selected
MENU EXIT	return to the previous menu	return to the previous menu
ENTER SELECT	decide a selected item	select an item
↑ +	move the cursor (▶) upwards	increase selected value
↓ −	move the cursor (▶) downwards	decrease selected value
RESET		reset current adjustment value to the factory setting

(The above items in white type correspond to the marks in the menu.)

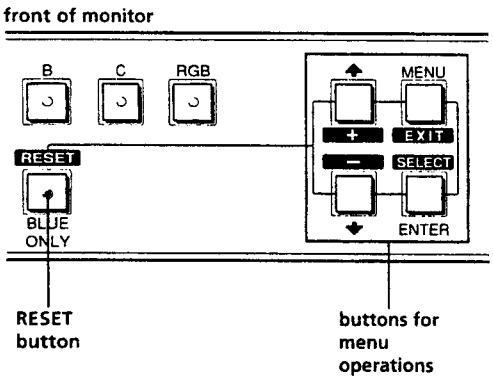

1 Main menu
Select an item and press ENTER to go to the following menu.

2 CHROMA SET UP menu
Set to ON to adjust the internal decoder for CHROMA and PHASE after AUTO ADJUST (6). [OFF]

3 CAPTION VISION menu
The monitor can display the signal with Caption Vision. To display it, select the caption type in this menu. [OFF]

4 USER CONFIG 1 menu
Select an item to adjust. To go to the USER CONFIG 2 menu select NEXT PAGE.

5 USER CONFIG 2 menu
Select an item to adjust. To go to the USER CONFIG 1 menu select PREVIOUS PAGE.

6 AUTO ADJUST screen
Select the color bar signal (full, SMPTE, EIA) and press ENTER to start auto adjusting for CHROMA SET UP.

7 COLOR SYSTEM DISPLAY menu
Select the color system display mode. In AUTO, the kind of color system being used appears on the screen each time you change the signal input. [AUTO]

8 V HOLD screen
Adjust the vertical hold if the picture rolls vertically. When you cannot read the display, select the input that is not connected.

9 RGB SYNC menu
Select SYNC ON G to operate the monitor on the sync signal from the displayed green signal.
Select EXT SYNC to operate the monitor on an external sync signal fed through the RGB SYNC connector. [SYNC ON G]

10 NTSC SETUP LEVEL menu
Select the NTSC setup level from two modes. The 7.5 setup level is mainly used in north America. The 0 setup level is mainly used in Japan. [7.5]

11 LANGUAGE menu
You can select the menu language from among the five languages (English, German, French, Italian, Spanish) on the menu. [ENGLISH]

([ ] indicates the factory setting position.)

5

Power sources

House current

Connect the AC power cord (supplied) to the AC IN socket and to a wall outlet.

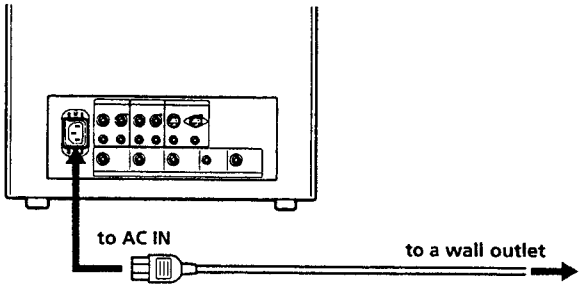

To connect an AC power cord securely with an AC plug holder

1

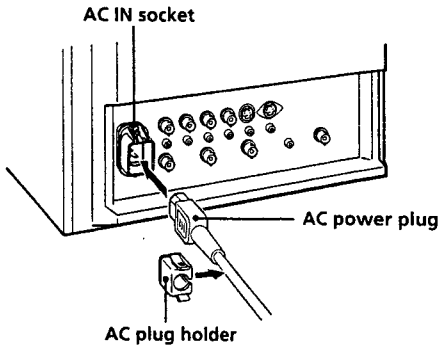

Plug the power cord into the AC IN socket. Then, attach the AC plug holder (supplied) on top of the AC power cord.

2

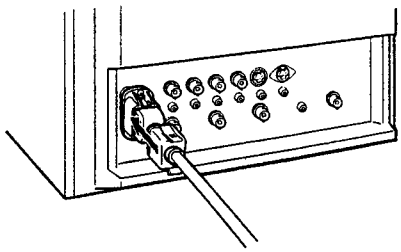

Slide the AC plug holder over the cord until it connects with the attached holder.

To remove the AC power cord

Pull out AC plug holder by squeezing the left and right sides.

6

SECTION 2
DISASSEMBLY

2-1. TOP COVER AND REAR COVER REMOVAL

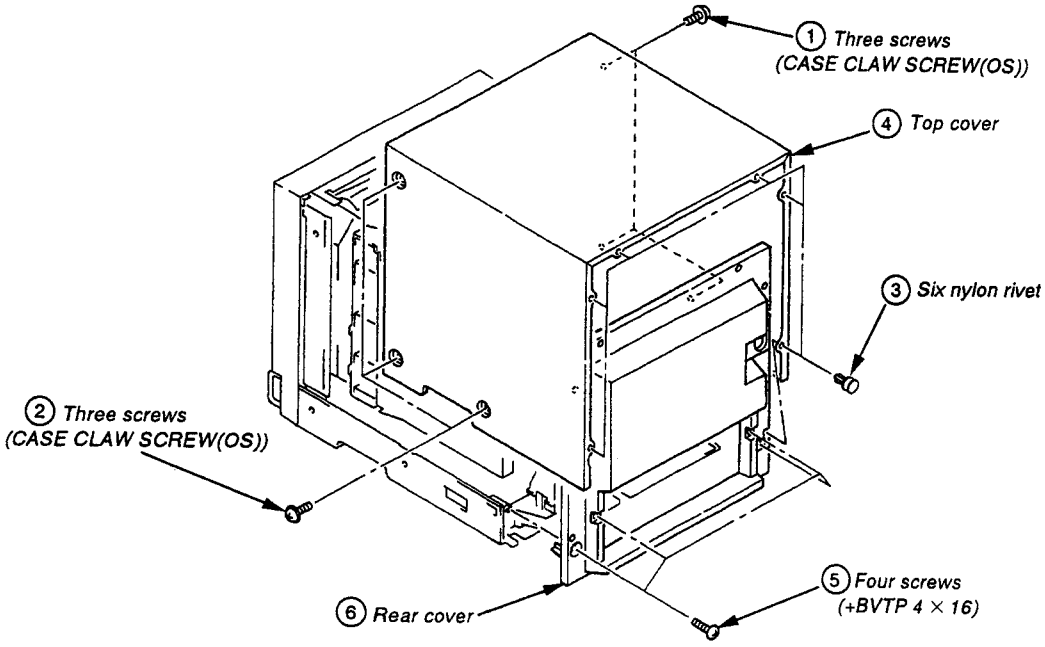

2-2. TERMINAL BOARD REMOVAL

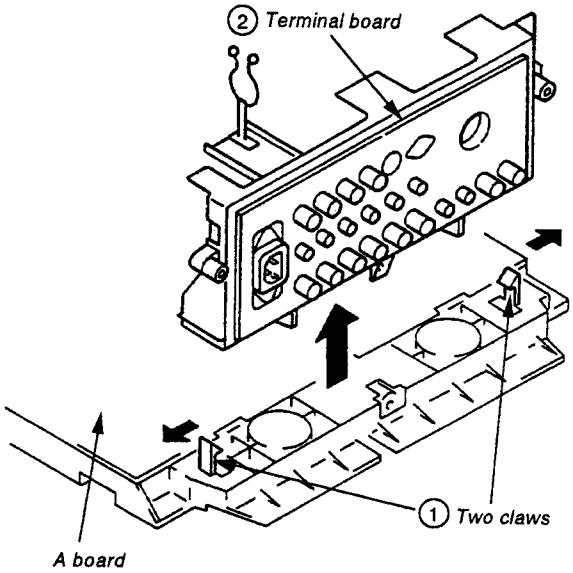

2-3. PICTURE TUBE REMOVAL

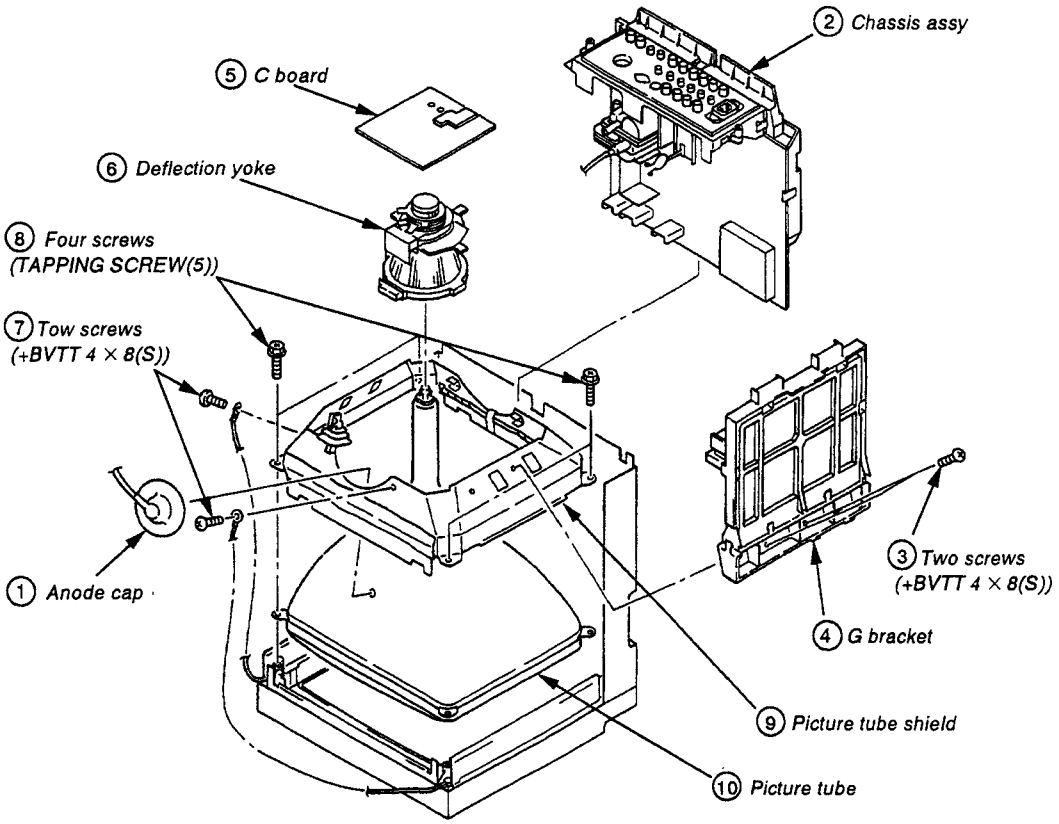

• REMOVAL OF ANODE-CAP

NOTE : Short circuit the anode of the picture tube and the anode cap to the metal chassis, CRT shield or carbon paint on the CRT, after removing the anode.

• REMOVING PROCEDURES

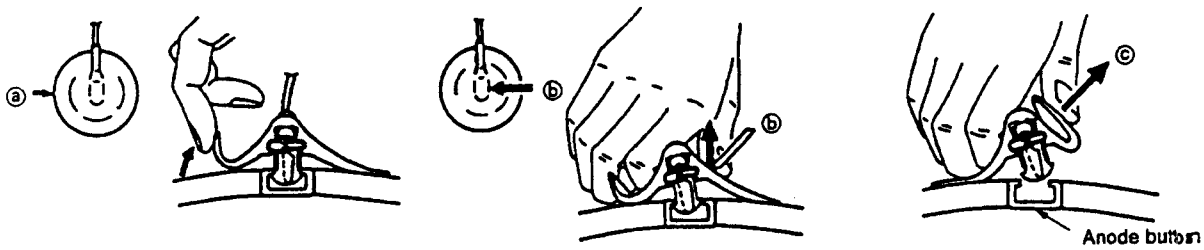

① Turn up one side of the rubber cap in the direction indicated by the arrow ⓐ.

② Using a thumb pull up the rubber cap firmly in the direction indicated by the arrow ⓑ.

③ When one side of the rubber cap is separated from the anode button, the anode-cap can be removed by turning up the rubber cap and pulling up it in the direction of the arrow ⓒ.

• HOW TO HANDLE AN ANODE-CAP

① Don't hurt the surface of anode-caps with sharp shaped material!

② Don't press the rubber hardly not to hurt inside of anode-caps!
A material fitting called as shatter-hook terminal is built in the rubber.

③ Don't turn the foot of rubber over hardly!
The shatter-hook terminal will stick out or hurt the rubber.

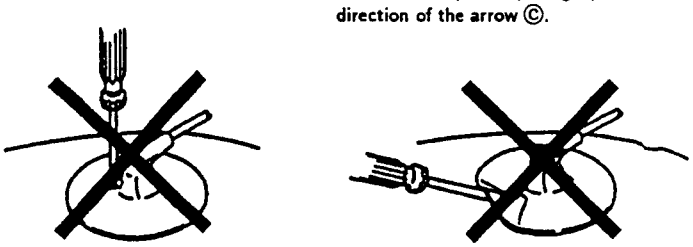

SECTION 3
SET-UP ADJUSTMENTS

3-1. PREPARATIONS (1)

Service Mode

This set is provided with a switch for service on the front panel that can be used to make various adjustments. The operation method of this switch is explained in detail below.

1. ENTERING THE SERVICE MODE

Simultaneously press the [ENTER] key and the [DEGAUSS] key shown on the display of the menu.

2. SERVICE MODE DISPLAY

(1)	(5)	(4)	(3)	(6)
(2)				

Range of Sevice Mode Display

(1) The service items are largely classified into 16 types displayed by titles.
(2) The names of the service items or READ / WRITE guidance, etc., are displayed. The names are dispalyed to the left and the guidance to the right.
(3) This is the serial number for each of the service items. 1-120.
(4) This is the adjustment data for the servise items that are now stored in the RAM. Adjustments can be made by changing these values, but as long as nothing is written to the ROM the adjustment values will be erased by turning off the power or by reading, so please be careful.
(5) When the adjustment data than is now displayed is identical with the data in the ROM, the cursor (▷) is displayed.
(6) The present status is displayed.
[*] : Writing to the ROM. Make sure not to turn off the power while this display is on.
[?] : ROM reading error. In this case, an image is output with the standard adjustment data that the microcomputer itself possesses.
[¿] : Problem in the I²C bus.

3. FINISHING THE SERVICE MODE

Simultaneously press the [ENTER] key and the [DEGAUSS] key shown on the display of the menu.

4. EASY ON / OFF OF THE SERVICE MODE

If once entering the service mode after having turned on the power, easy ON / OFF is possible by once more pressing the A, B or C switch on the front panel (the LED lights) as long as the power is not turned off or as long as the service mode is not finished.

5. CHANGE OF POSITION OF THE SERVICE MODE DISPLAY

If the switch is continuously pressed when turning on in the above easy mode, the display position moves in the V direction. This method is used when the display is outside of the effective screen area.

6. CHANGE OF SERVICE ITEMS

The items are returned with the [MENU] key and forwarded with the [ENTER] key. When a key is continuously pressed, the operation will be repeated.

7. CHANGE OF SERVICE DATA

The service data is made larger with the [↑] key and smaller with the [↓] key. When continuously pressing the keys, the operation will be repeated.

8. READING OF SERVICE DATA

When reading data from the ROM to the RAM, press the [B /D] key once and check than the READ display is shown in the guidance, and then press the [B / O] key once again. The adjustment data that is written will return to its previous state, so please be careful.

9. WRITING OF SERVICE DATA

When writing data from the RAM to the ROM, press the [DEGAUSS] key once and check that the WRITE display is shown in the guidance, and then press the [DEGAUSS] key once again. Not only the displayed data will be written, but all data, so please be careful.

10. CARRYING OUT FACTORY RESETTING

In case the adjustment data has been destroyed for some reason, and you keep pressing the [B / O] key at the beginning of the above reading, the READ guidance will change to FACTRY RESET guidance in approximately 3 seconds so that the factory resetting can be carried out. By once again pressing the [B / O] key after this, resetting will be carried out ([*] will be displayed as status) and factory resetting will be executed. However, in case the data available at the time of shipment from the factory has been destroyed, or if the ROM has been replaced, etc., or if factory setting mentioned later on has been carried out, factory resetting is executed.

11. CARRYING OUT FACTORY SETTING

Make sure to make possible the above factory resetting by making a copy of the adjustment data when replacing the ROM. If you keep pressing the [DEGAUSS] key at the beginning of the above writing, the WRITE guidance will change into FACTORY RESET guidance after approximately 3 seconds. By once again pressing the [DEGAUSS] key after this, setting will be carried out ([*]will be dispalyed as status) and the data will be copied. By carrying out this operation, the selection items of the menu and the adjustment values will be reset to the standard conditions, so please be careful. If this operation is carried out once, it cannot be carried out again, but the FACTORY SET FLAG (No. 120) in the service mode can be set to 1.

SERVICE DATA STANDARD

SERVICE MAP Ver 5 . x (1-120)

NO.	SERVICE ITEM		MAX	14"	20"	NO.	SERVICE ITEM		MAX	14"	20"
1	NOR 50 DEF	H FREQUENCY	255	80	107	61	C / T1 ??00K	BIAS (RED)	1023	443	443
2		VIDEO PHASE	255	141	127	62		BIAS (GREEN)	1023	512	512
3		V SIZE	255	165	155	63		BIAS (BLUE)	1023	394	394
4		V CENTER	255	122	116	64		GAIN (RED)	1023	662	662
5	NOR 60 DEF	H FREQUENCY	255	90	112	65		GAIN (GREEN)	1023	700	700
6		VIDEO PHASE	255	120	123	66		GAIN (BLUE)	1023	536	536
7		V SIZE	255	157	161	67		B / O (RED)	255	120	120
8		V CENTER	255	128	111	68		B / O (GREEN)	255	125	125
9	NOR DEF	H SIZE	255	111	102	69	C / T2 ??00K	3200K SW	1	0	0
10		PIN PHASE	255	108	110	70		BIAS (RED)	1023	263	263
11		PIN AMP	255	112	122	71		BIAS (GREEN)	1023	512	512
12		U/L PIN	255	126	155	72		BIAS (BLUE)	1023	459	459
13		SEXY	255	128	128	73		GAIN (RED)	1023	572	572
14		V LINEARITY	255	132	82	74		GAIN (GREEN)	1023	700	700
15		V BOW	* 63	32	32	75		GAIN (BLUE)	1023	656	656
16		V ANGLE	* 63	32	32	76		B / O (RED)	255	86	86
17	U/SDEF	V SIZE (50)	255	124	134	77		B / O (GREEN)	255	105	105
18		V SIZE (60)	255	116	131	78	W / B	SUB CON (4 : 3, NORMAL)	255	210	210
19		H SIZE	255	115	89	79		SUB CON (4 : 3, H / V DELAY)	255	122	122
20		PIN PHASE	255	118	112	80		SUB CON (16 : 9, NORMAL)	255	165	165
21		PIN AMP	255	74	96	81		SUB CON (16 : 9, H / V DELAY)	255	93	93
22	16:9 NOR DEF	V SIZE (50)	255	81	89	82		SUB BRIGHT	255	71	71
23		V SIZE (60)	255	85	100	83		USER B / O (RED)	255	120	120
24		PIN PHASE	255	113	120	84		USER B / O (GREEN)	255	125	125
25		PIN AMP	255	64	68	85	OTHER	OSD POSITION	255	129	129
26		U/L PIN	255	132	136	86		V HOLD	255	128	128
27	16:9 U/S DEF	V SIZE (50)	255	41	59	87		H BLANKING	255	68	68
28		V SIZE (60)	255	35	55	88		V BLANKING (50)	255	63	63
29		PIN PHASE	255	124	122	89		16 : 9 BLANKING START(50)	255	37	37
30		PIN AMP	255	47	55	90		16 : 9 BLANKING END(50)	255	163	163
31	COMPONENT	SUB PHASE	255	140	140	91		V BLANKING (60)	255	117	117
32		SUB CHROMA (NORMAL)	255	104	104	92		16 : 9 BLANKING START(60)	255	40	40
33		SUB CHROMA (SMPTE)	255	168	168	93		16 : 9 BLANKING END(60)	255	215	215
34		R-Y LEVEL	255	155	155	94		H DELAY	255	165	165
35	NTSC	BURST GATE PULSE WIDTH	255	22	22	95		V DELAY	255	101	101
36		CRYSTAL	255	51	51	96		HP POSITION	255	130	130
37		PHASE (NORMAL)	255	103	103	97		HP WIDTH (NORMAL)	255	90	90
38		PHASE (ACC OFF)	255	112	112	98		HP WIDTH (H / V DELAY)	255	35	35
39		B-Y PHASE	255	141	141	99	SYSTEM	SDI AUDIO	7	5	5
40		CHROMA (NORMAL)	255	123	123	100		358TRAP FILTER	1	0	0
41		CHROMA (ACC OFF)	255	20	20	101		ACC	1	0	0
42		R-Y LEVEL	255	87	87	102		CAPTION VISION	7	0	0
43	NTSC 443	CRYSTAL	255	65	65	103		COMPONENT LEVEL	3	2	2
44		PHASE (NORMAL)	255	80	80	104		NTSC SETUP LEVEL	1	0	0
45		PHASE (ACC OFF)	255	75	75	105		CHROMA SET UP	1	0	0
46		B-Y PHASE	255	140	140	106		COLOR SYSTEM DISPLAY	3	0	0
47		CHROMA (NORMAL)	255	117	117	107		COLOR TEMPERATURE	3	0	0
48		CHROMA (ACC OFF)	255	87	87	108		USER PRESET	1	0	0
49		R-Y LEVEL	255	100	100	109		LANGUAGE	7	0	0
50	PAL	PHASE (NORMAL)	255	87	87	110		RGB SYNC	1	0	0
51		PHASE (ACC OFF)	255	72	72	111		OPTION BOARD	7	0	0
52		B-Y PHASE	255	105	105	112		AGING MODE	1	0	0
53		CHROMA (NORMAL)	255	141	141	113		PAL-M	1	0	0
54		CHROMA (ACC OFF)	255	90	90	114		MODEL	15	*	**
55		R-Y LEVEL	255	120	120	115		COLOR TEMP DISP 1	127	65	65
56	SECAM	CHROMA	255	120	120	116		COLOR TEMP DISP 2	127	93	93
57		R-Y LEVEL	255	229	229	117		REMOTE ADDRESS	127	0	0
58		COLOR BALANCE (R-Y)	255	116	116	118		RESERVED 1	1	0	0
59		COLOR BALANCE (B-Y)	255	98	98	119		RESERVED 2	1	0	0
60	C/T1 ??00K	3200K SW	1	0	0	120		FACTORY SET FLAG	1	0	0

* Among the data 8 bits (MAX255) only the upper 6 bits can be changed.

** PVM-1954Q, PVM-1350/1351Q/1354Q.

PREPARATIONS (2)

* When composite video or component signals are supplied, they must be supplied as below.

Signal		Signal Contents	Standard Level (Pedestal-White)
COMPOSITE VIDEO (75%COLOR BAR)	358NT 443NT	100% WHITE	0.714V
		75% WHITE	0.536V
		BURST (GREEN) (This item only P-P)	286mV (632mV)
	PAL SECAM	100% WHITE	0.7V
		75% WHITE	0.525V
		PAL BURST (GREEN) (This item only P-P)	300mV (664mV)
COMPONENT (75%COLOR BAR)	BETA 0	100% WHITE Y	0.7V
		75% WHITE Y	0.525V
		75% COLOR B-Y, R-Y (This item only P-P)	0.7V
	SMPTE	100% WHITE Y	0.7V
		75% WHITE Y	0.525V
		75% COLOR B-Y, R-Y (This item only P-P)	0.525V

* In this document, terms inside boxes [ ] are names of service mode adjustments.

Example [60H-FREQ]

* After making adjustments in service mode, write the adjustment data before cutting off the power. If you cut off the power without writing, the results of your adjustments are all lost.

* Standard inspection conditions

Unless specifically specified otherwise in this document. the following conditions are used for adjustments and inspections.

APERTURE	MIN
BRIGHT	50% (Center click)
CHROMA	50% (Center click)
PHASE	50% (Center click)
CONTRAST	80% (Center click)
VOLUME	50%

3-2. WRITING MODEL DATA

1. In service mode, write in the following model data at No. 114 [MODEL].

PVM-1350	7
PVM-1351Q/1354Q	4

2. In service mode, write in the following data at No. 115 [COLOR TEMP DISP 1].

PVM-1350/1351Q/1354Q	65

3. In service mode, write in the following data at No. 116 [COLOR TEMP DISP 2].

PVM-1350/1351Q/1354Q	93

3-3. PICTURE OUTPUT

1. Set the AC input voltage.
   (1) Input the video and audio signals to the corresponding terminals on the connector panel.
   (2) Set the sliduck AC voltage as shown on the right. (*1-1)

Model	Voltage
PVM-1350/1351Q/1354Q	AC120 ± 3V (Distortion rate : 3% or less)

3-4. LANDING ADJUSTMENT

1. Preparations
   1) To reduce the influence of geomagnetism, face the set's CRT screen east or west.
   2) Loosen the deflection yoke fixture and lower the deflection yoke to the rear.
   3) Switch on the Power switch and degauss with the degausser.
   4) Adjust the deflection yoke tilt.
2. Adjustment
   1) CONT ····· MAX
      BRT····· Position providing good vision
   2) The rough adjustments of the white balance, G2, and convergence must be completed already.
   3) Set green-only.
   4) Adjust the purity knob so that the green comes to the center of the screen. Make the red and blue about even. Fig. 1
   5) Switch to blue only, red only, and green only and verify each. Fig. 1, 2, and 3
   6) Bring the deflection yoke gradually forward and adjust the deflection yoke so that the R and B at both sides of the screen become green. Fig. 2 → 3
   7) If the deflection yoke comes too far forward, you will see the pattern shown in Figure 4. If that happens, lower the deflection yoke to the rear. Fig. 4 → 3
   8) Switch the single color switch to B and verify the single color. Fig. 6
   9) Switch the single color switch to R and verify the single color. Fig. 9
   10) When one of the colors does not become the single color correctly, check by repeating Items 7 and 8 based on the single color not coming into adjustment.
   If you can not obtain landing in the corners, paste on magnets.
   11) Switch to an all-white signal and check the uniformity.
   12) When the deflection yoke position is determined, fasten it with the fixture.

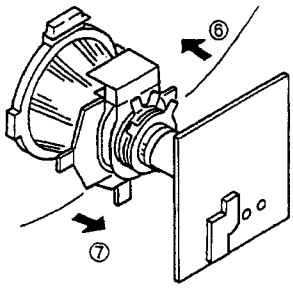

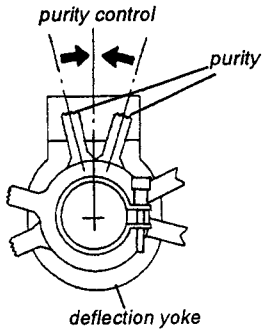

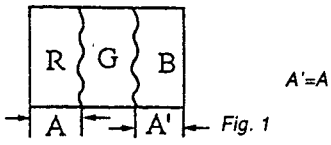

Fig. 1

Fig. 2

Fig. 3

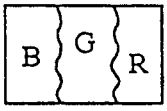

Fig. 4

Fig. 5

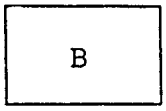

Fig. 6

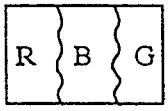

Fig. 7

Fig. 8

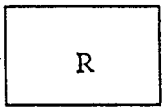

Fig. 9

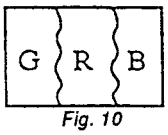

Fig. 10

3-5. CONVERGENCE ADJUSTMENT

1. Input a dot pattern signal.
   CONT ····· Position providing good vision
   BRT····· MIN
2. Align the horizontal R, G, and B dots at the center of the screen with the H-STAT VR. (*1)
   *1 : If the H-CENTER adjustment was after the H-STAT adjustment, re-adjust the H-STAT.
   (The H-CENT VR changes the H-STAT too.)
3. Align the R, G, and B at the center of the screen with the V-STAT magnets. (*2)
   *2 : After the V-STAT adjustment, paint on the knobs to lock them.

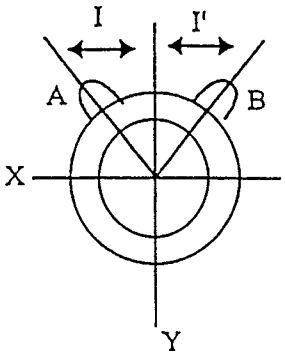

Good example

V-STAT magnet knobs
While keeping the angles for A and B equal (I=I'), align the vertical convergence.

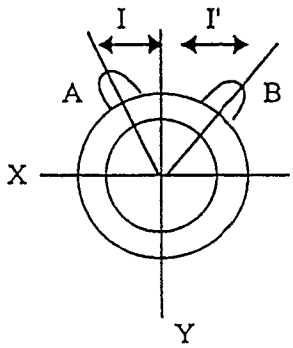

Bad example

If the A and B knobs are not symmetrical (I=/I'), this has bad effects. The focus may deteriorate and beam striking may occur.

4. For HMC, use the 6-pole magnet to adjust the R and B dots to be symmetrical left and right about the G dot. (*1)

*1 :

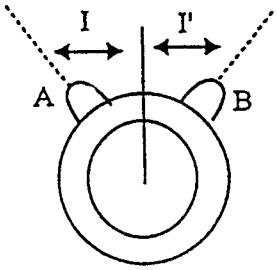

6-pole magnet

The HMC adjustment changes the opening of the 6-pole magnet.

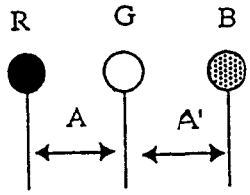

Adjust the 6-pole magnet so that A=A'. You must maintain the relationship I≠I' while moving the magnet.

95. For VMC, use the 6-pole magnet to adjust the R and B dots to be symmetrical above and below the G dot. (*2)

*2 :

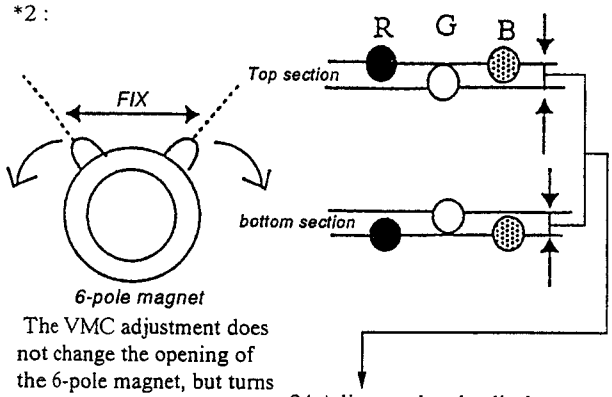

The VMC adjustment does not change the opening of the 6-pole magnet, but turns it left and right.

24 Adjust so that the displacement up and down are the same.

6. Adjust by repeating the adjustments in Items 2 through 5. (*3)
   *3 : The above adjustment may affect the landing, so after this adjustment, check the landing again.
7. After the adjustment is complete, paint on the knobs to lock them.

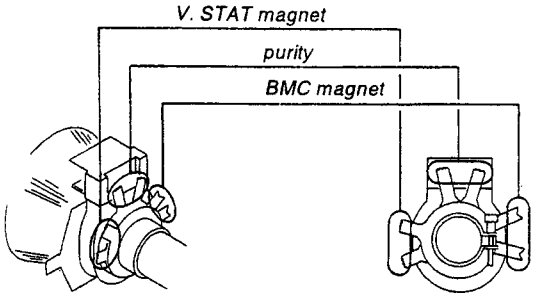

3-6. DEFLECTION YOKE NECK ROTATION ADJUSTMENT

If there is misconvergence at both sides on the X or Y axis of the screen, turn the neck of the deflection yoke in the direction of the arrow to reduce the misconvergence for the entire CRT screen to within the tolerance.

1. Reverse misconvergence pattern

Turn the deflection yoke neck down.

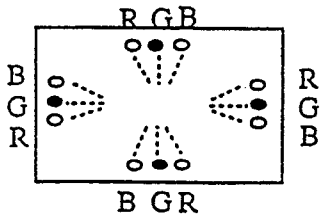

Positive misconvergence pattern
Turn the deflection yoke neck up.

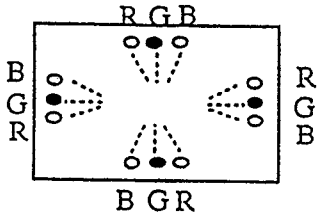

Pattern when deflection yoke too far to the left

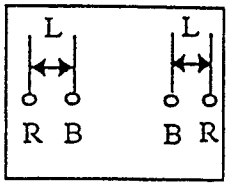

As viewed from the CRT screen, turn the deflection yoke neck to the right.

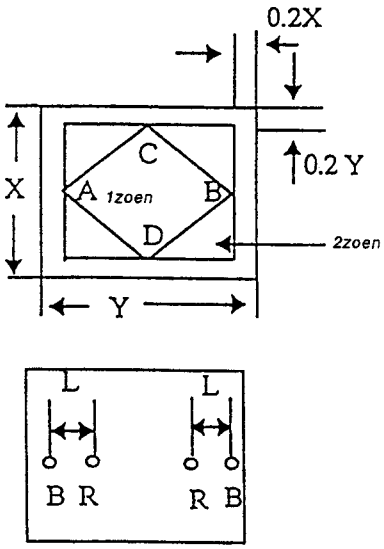

Pattern when deflection yoke too far to the right

2. Insert the three wedges in the deflection yoke and CRT funnel surface to fasten the deflection yoke.

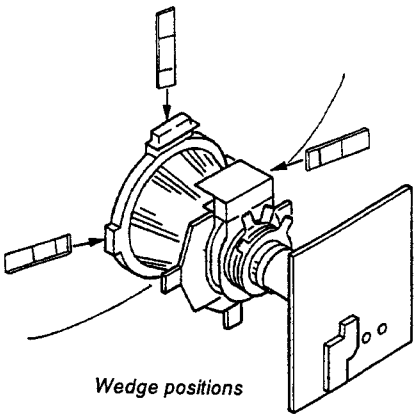

Wedge positions

3. The pattern below can not be corrected by turning the neck.

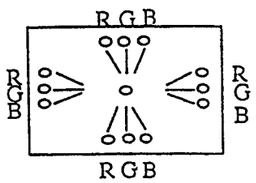

* Gun rotation
The beam is twisted at both sides on the X axis and Y axis.

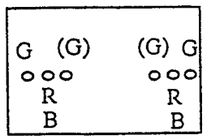

* HCR large (small)
At both sides of the screen, the G raster horizontal component is wider (narrower) than those of the R and B rasters.

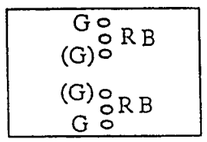

* VCR large (small)
At both sides of the screen, the G raster vertical component is wider (narrower) than those of the R and B rasters.

3-7. G2 ADJUSTMENT

1. Input a 525 monoscope signal.
2. Connect the oscilloscope to A board TP403.
3. Of the three reference pulses, measure the lowest one.
4. With the Screen VR, adjust so that left end of the waveform is : 1.35 V ± 0.05

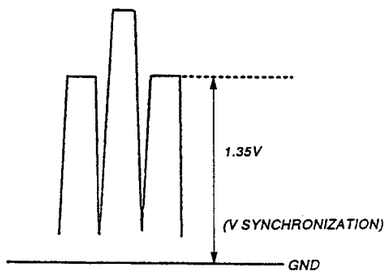

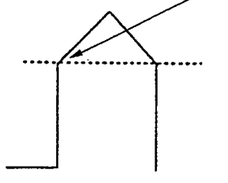

Since the waveform is triangular as shown on the left, adjust the left end to be 1.35 V.

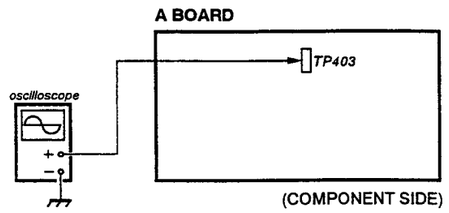

3-8. WHITE BALANCE ADJUSTMENT

For measuring equipment, use a color analyzer (for example from Minolta).
For the PVM-1350, Items 7, 8, 14, 15 and 16 are not necessary.

1. Input a 525 monoscope signal.
   (Input from Line A or Line B, with no burst.)
2. Set :
   CONT ····· 0%
   BRT····· 50%
3. On a 20-tone gray scale, adjust service mode SUB BRIGHT so that
   0 and 5 IRE → cut off
   10 IRE → slight glow
4. Input 525 all-white (no burst, composite signal).
5. Set CONT to 80%.
6. Adjust the all-white signal luminance so that the screen luminance is 3 NIT.
7. Press MENU and select COL TEMP/BAL.
8. Select 6500 K.
9. Put the unit into service mode. (*1)
   *1 : Set 3200 K SW to 0 for both 9300K and 6500K.
10. Adjust to the standard values with C/T1 6500K BIAS.
    (G must be fixed at "512".) (*2)
    *2 : Adjust the cut-off to be 3 NIT.
11. Switch the all-white signal luminance to 100 IRE.
12. Adjust to the standard values with C/T1 6500K GAIN.
    (G must be fixed at "700".)
13. Repeat Items 10, 11 and 12 until the adjustment is complete, then write the adjustment data.
14. Press MENU and select COL TEMP/BAL.
15. Select 9300 K.
16. In the same manner as in Items 10, 11, 12 and 13 make the C/T2 9300K BIAS and C/T2 9300K GAIN adjustments.

3-9. BLUE-ONLY WHITE-BALANCE ADJUSTMENT

For the PVM-1350, Items 3, 4, 5, 6, 7 and 8 are not necessary.

1. Switch the user control SW Blue Only On (to set blue-only mode).
2. Input an all-white signal (no burst composite signal). (*1)
   The luminance of the all-white signal must be 100 IRE.
   CONT ····· 80%
   BRT····· 50%
3. Select COL TEMP/BAL.
4. Select 6500 K.
5. Adjust to the standard values with C/T1 6500K B/O (RED) and C/T1 6500K B/O (GREEN).
6. Select COL TEMP/BAL.
7. Select 9300 K.
8. Adjust to the standard values with C/T1 9300K B/O (RED) and C/T1 9300K B/O (GREEN).
9. Check that the white balance is obtained when the all-white signal luminance is adjusted and the screen luminance is 8 NIT.

3-10 SUB BRT ADJUSTMENT

1. Input a 525 monoscope signal.
2. CONT ····· MIN
   BRT····· CENTER (50%)
3. Put the unit into service mode and select SUB BRIGHT.
4. Adjust SUB BRIGHT so that 10 IRE gives a slight glow and 10 IRE gives cut off.

3-11. FOCUS ADJUSTMENT

Note : PVM-1350, 1351Q and 1354Q are adjusted with RV707 on the C board.
PVM-1351Q, 1354Q are adjusted with the RV at the top of the FBT main nuit

1. Input a 525 monoscope signal.
2. Adjust the focus to optimize the focus on the characters "30" at the center of the screen.
3. Switch to an all-white signal and check the uniformity.

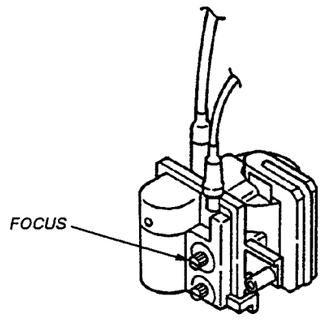

SECTION 4
SAFETY RELATED ADJUSTMENT

The following adjustments should always be performed when replacing the following components (marked with ⧓ , ◪ on the schematic diagram).

+B detection..... ⧓ R1535
Tertiary coil detection..... ⧓ R1536
Part replosed(◪)
Hold Down Circuit..... ◪ A board IC500, D533, R1537, C592, R1536, C523, R1560, R551, C549, R518, C506, C512, D501, R506, R519, T501, IC507
Beam Current Protector Circuit..... ◪ A board R508, R515, R516, R517, C513, Q500, Q511
B+ Regulator Circuit..... ◪ A board R1535
◪ G board C603,IC602

B+ MAX VOLTAGE CONFIRMATION (RV601)

Standard : 115.0~117.0 VDC
Check Condition : Input voltage : 130~132 VAC
Note : Use NF Power Supply or make sure that distortion factor is 3% or less.
Input signal : ALL White
Controls : BRT & CONT ⇨ Minimum

HOLD-DOWN CIRCUIT VOLTAGE CONFIRMATION

Check Condition : Input voltage : 130~132 VAC
Input signal : monoscope signal
Controls : BRT & PIC ⇨ initial reset
B+ voltage : Less than 117.0 V

(1) Hold down circuit (+B Actuation)
a) When IABL = 600 ± 50 μ A, raster goes out at less than 130.5 V of +B voltage (TP502) by adjusting △ R690 and RV601.

Input signal : ALL white
△ R690 : 470-5.6k 1/4 W RN

b) When IABL = 40 ± 20 μ A, raster goes out at less than130.5 V of +B voltage (TP502) by adjusting △ R690 and RV601.
Input signal : Dot

(2) Hold down circuit (Tertiary coil detection voltage)
Confirmatory item : 110.0 V voltage should be applied to the (11) pin of IC500.

a) When IABL = 600 ± 50 μ A, raster goes out when applying less than DC 146.7 V voltage to the (11) pin (TP503) of IC500 from outside.

Input signal : ALL white

b) When IABL = 40 ± 20 μ A, raster goes out when applying less than DC 147.0 V voltage to the (11) pin (TP503) of IC500 from outside.

Input signal : Dot

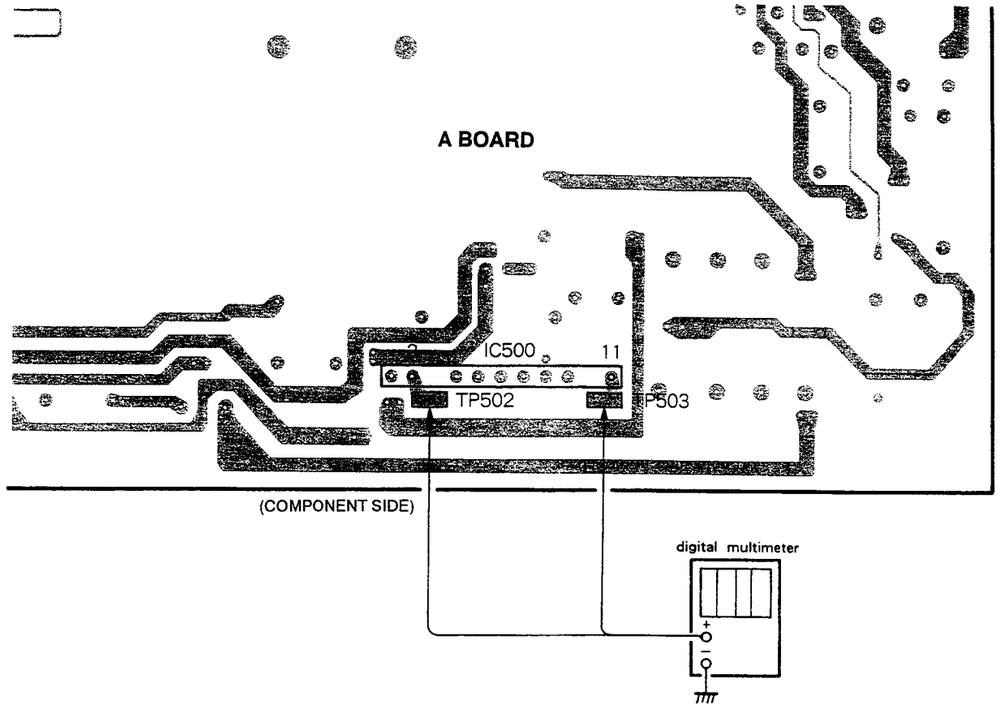

(COMPONENT SIDE)

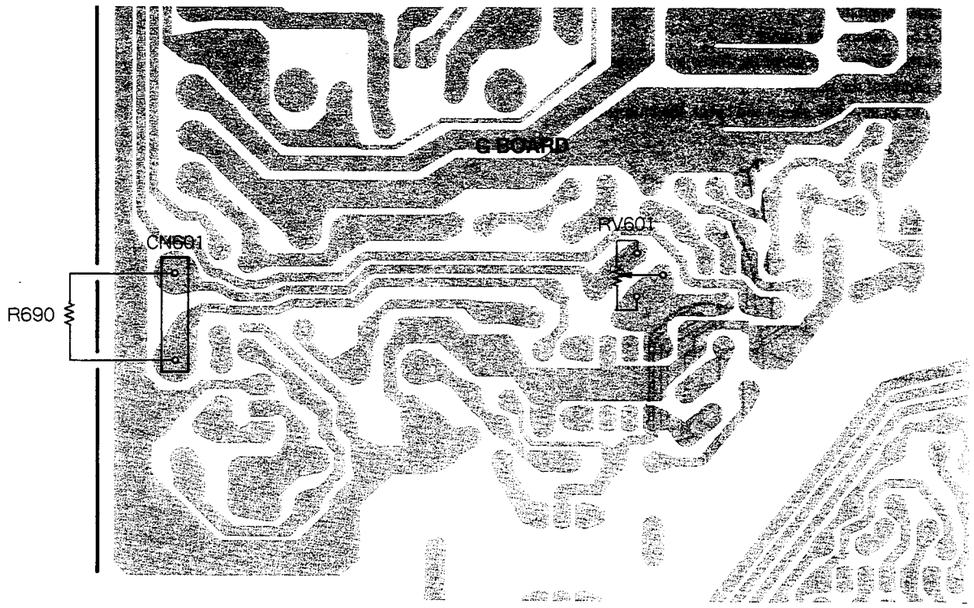

(CONDUCTOR SIDE)

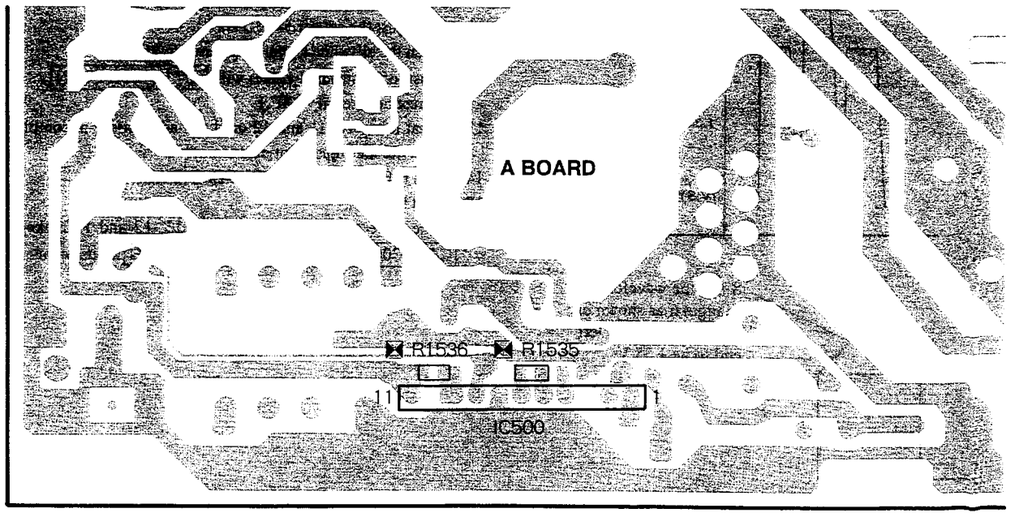

(CONDUCTOR SIDE)

SECTION 5
CIRCUIT ADJUSTMENTS

5-1. A BOARD ADJUSTMENT

A BOARD – COMPONENT SIDE –

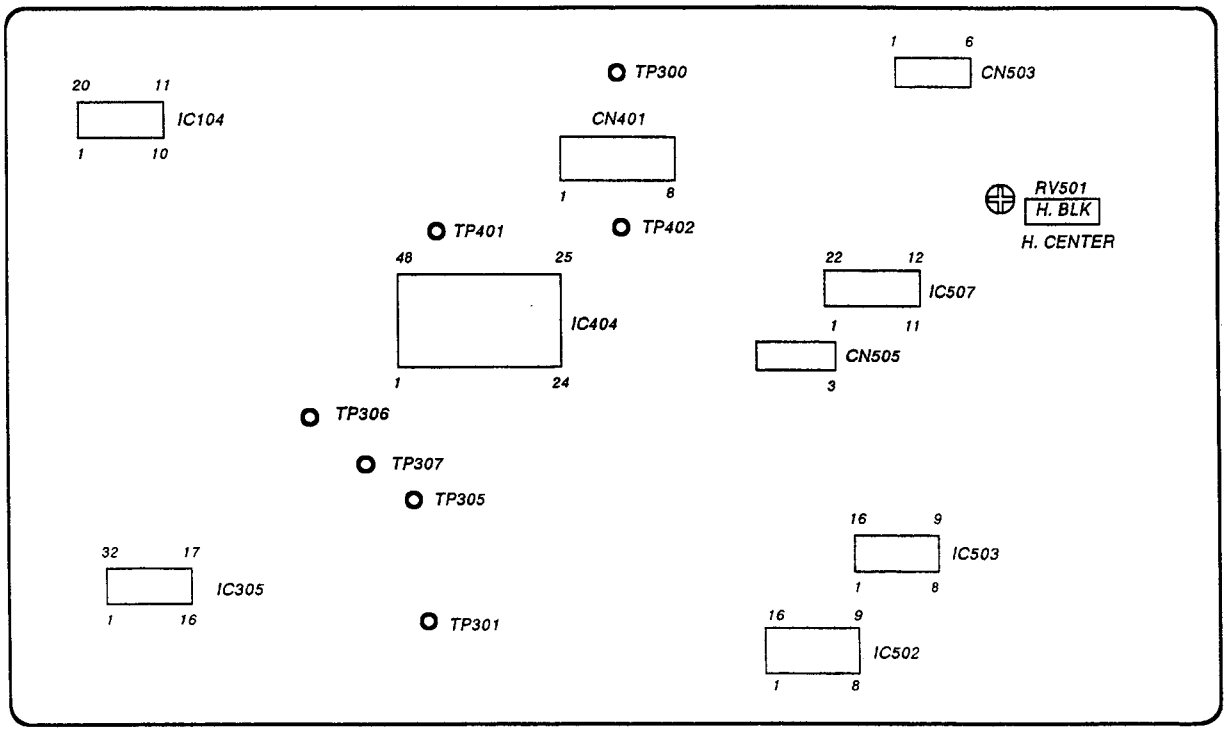

A BOARD – CONDUCTOR SIDE –

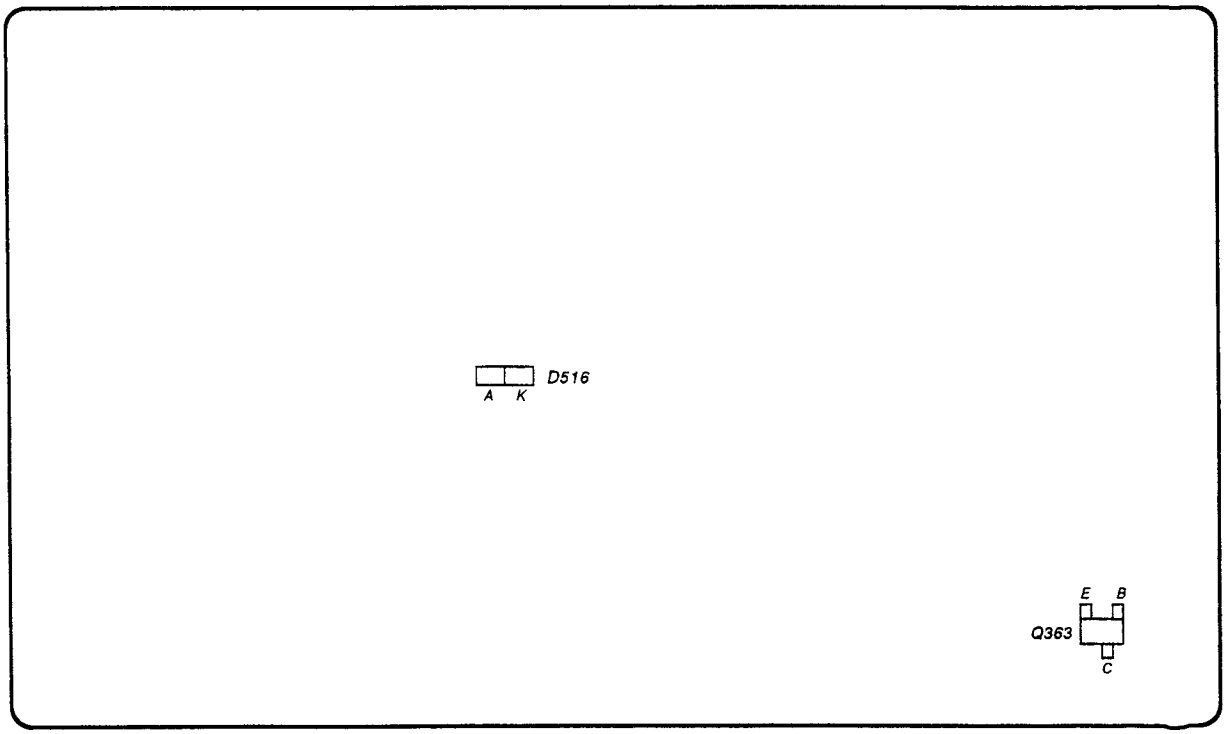

I. Preparations

* When composite video or component signals are supplied from connector CN301, they must be supplied taking into account the effect of the Q board as indicated on the right.
The levels of the signals supplied must be within ± 2% of the standard on the right.

Signal		Signal Contents	Standard Level (Pedestal-White)	Reduction Ratio	Connector Feed Level (Pedestal-White)
COMPOSITE VIDEO (75% COLOR BAR)	358NT 443NT	100% WHITE	0.714V	93%	0.664V
		75% WHITE	0.536V	93%	0.498V
		BURST (GREEN) (This item only P-P)	286mV (632mV)	94% (94%)	269mV (594mV)
	PAL SECAM	100% WHITE	0.7V	94%	0.651V
		75% WHITE	0.525V	94%	0.488V
		PAL BURST (GREEN) (This item only P-P)	300mV (664mV)	94% (94%)	282mV (624mV)
COMPONENT (75% COLOR BAR)	BETA0	100% WHITE Y	0.7V	94.8%	0.664V
		75% WHITE Y	0.525V	94.8%	0.498V
		75% COLOR B-Y, R-Y (This item only P-P)	0.7V	94.8%	0.664V
	SMPTE	100% WHITE Y	0.7V	94.8%	0.664V
		75% WHITE Y	0.525V	94.8%	0.498V
		75% COLOR B-Y, R-Y (This item only P-P)	0.525V	94.8%	0.498V

* The function or input can be selected by writing the corresponding data from the table below into microcomputer (IC101) RAM address 0006h.

BIT	FUNCTION	DATA
0-3	LINE A/RGB	1
	LINE B/COMPONENT	2
	LINE C/SDI	3
	LINE/RGB	4
	EXT SYNC	5
	DEGAUSS	6
	BLUE ONLY	7
	UNDER SCAN	8
	H/V DELAY	9
	16 : 9	10
4-7	MENU	1
	SELECT	2
	UP	3
	DOWN	4

* In this document, terms inside boxes [ ] are names of service mode adjustments.
Example [60H-FREQ]
* CONT 80% is the center click position for the user control.

II. Deflection System Adjustment

1. ADJUSTING THE HORIZONTAL OSCILLATION FREQUENCY

* For the PVM-1350, Items 6 and 7 are not necessary.

1. Input a 525 monoscope signal.
2. Set :
   CONT····· 80%
   BRT·····50%
3. Put the unit into service mode.
4. Drop A board IC507 Pin 1 to ground with a 100μ/16V electrolytic capacitor. (Ground must use CN505 Pin 3.)
   Or plug the H-FREQ tool into CN505.
5. Adjust 60H-FREQ so that the diagonal lines on the screen become vertical lines. (Fig. 1)
6. Input a 625 monoscope signal.
7. Adjust 50H-FREQ so that the diagonal lines on the screen become vertical lines. (Fig. 1)

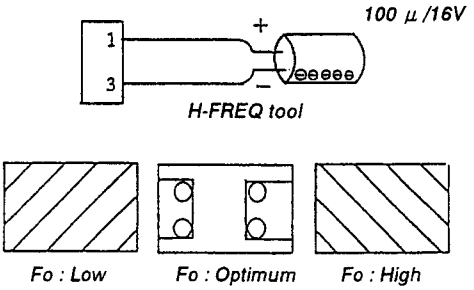

Fig. 1

2-1. H-BLK Adjustment

1. Input a 525 monoscope signal.
2. Set :
   CONT·····80%
   BRT·····50%
3. Put the unit into service mode.
4. Observe the anode of D516 or TP300 with the oscilloscope and adjust H-BLK to obtain the waveform in Fig. 2.

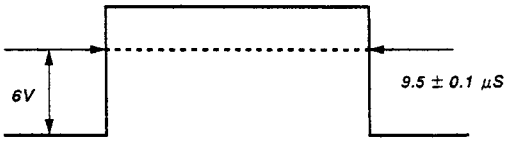

Fig. 2

2-2. H-BLK Adjustment (PVM-1350 only)

1. Put the unit into service mode.
2. Input an adjustment value of 70 for H-BLK.

3-1. PICTURE PHASE Adjustment (PVM-1351Q/1354Q only)

1. Input a 525 monoscope signal.
2. Put the unit into under scan mode.
3. Set :
   CONT····· Min.
   BRT·····Max.
4. Put the unit into service mode.
5. Use U/S H SIZE to adjust the size of the monoscope white frame to be about 1 cm to the inside of the limits of the effective screen.
6. Turn RV501 (H-CENT) and adjust so that B=B'.
7. Adjust 60 VIDEO PHASE so that the signal region comes to the center (A=A') of the deflection region. (Fig. 3)

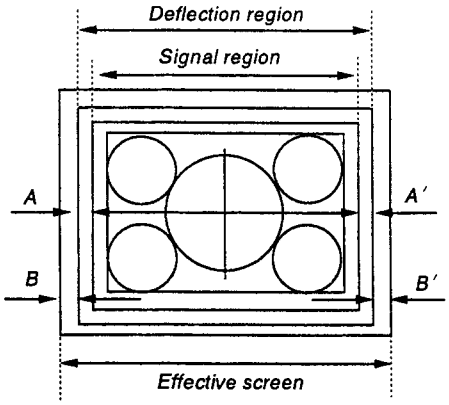

Fig. 3 A=A' B=B'

8. Input a 625 monoscope signal.
9. Adjust 50 VIDEO PHASE in the same manner.

3-2. PICTURE PHASE Adjustment (PVM-1350 only)

1. Input a 525 monoscope signal.
2. Put the unit into service mode.
3. Input an adjustment value of 123 for 60 VIDEO PHASE.
4. Input an adjustment value of 137 for 50 VIDEO PHASE.
5. Roughly adjust H-SIZE so that the horizontal size is 15.75 frames.
6. Turn RV501 (H-CENT) and adjust so that the left and right over scan amounts are equal.

4-1. V•BLK Adjustment (PVM-1351Q/1354Q only)

1. Input a 525 monoscope signal.
2. Put the unit into under scan mode.
3. Set :
   CONT····· Min.
   BRT·····Max.
4. Put the unit into service mode.
5. Adjust V BLK (60) so that before 0.5H of the white frame on the top of the monoscope is barely unblocked.
6. End under scan mode and put the unit into Normal 16:9 mode.
7. Adjust 16 : 9 BLK START (60) and 16 : 9 BLK END (60) so that the vertical direction frame count is 11.75 for the light emitting section of the screen and at the same time the top and bottom block amounts are the same.
   Note : This must be done before the 16 : 9 V-SIZE adjustment.
8. Input a 625 monoscope signal.
9. Adjust V BLK (50) in the same manner as in 5 above.

1010. Adjust [16 : 9 BLK START (50)] and [16 : 9 BLK END (50)] in the same manner as in 7 and 8 above so that the vertical direction frame count is 11.2 for the light emitting section of the screen and at the same time the top and bottom block amounts are the same.

4-2. V-BLK Adjustment (PVM-1350 only)

1. Put the unit into service mode.
2. Use 60 V-SIZE and reduce the image size so that the upper and lower blanking can be seen.
3. Use [60 V-BLK] and adjust so that the white frame of the upper part becomes ½.

5. VERTICAL DEFLECTION SECTION Adjustment

* PVM-1350 has no 16 : 9 mode.
* PVM-1350 has no 625 mode.

Normal V. Size Standards

		525	625
4 : 3		11.75 ± 0.2 frames	11.2 ± 0.2 frames
16 : 9	14″	154 ± 2mm	←
	20″	217 ± 3mm	←

1. Input a 525 monoscope signal.
2. Set :
   CONT ····· 80%
   BRT ····· 50%
3. Put the unit into service mode.
4. Adjust the size to 12 frames with [NOR 60 V SIZE].
   Adjust the vertical linearity with [V LIN].
   Adjust the vertical centering with [60 V CENT].
   Note : The V.CENT adjustment must be re-evaluated after the V.LIN adjustment.
   Adjust the size to the standard value with [NOR 60 V SIZE].
5. Put the unit into 16 : 9 mode.
6. Adjust in the same manner with [16 : 9 NOR V SIZE (60)].
7. Put the unit into normal scan mode.
8. Input a 625 monoscope signal.
9. Roughly adjust [NOR 50V SIZE] so that the size is 11 frames.
   Adjust the vertical centering with [50 V CENT].
   Note : The V.CENT adjustment must be re-evaluated after the V.LIN adjustment.
   Adjust the size to the standard value with [NOR 50 V SIZE].
10. Put the unit into 16 : 9 mode.
11. Adjust in the same manner with [16 : 9 NOR V SIZE (50)].

6. HORIZONTAL DEFLECTION SECTION ADJUSTMENT NORMAL SCAN Adjustment

* PVM-1350 hasno 625 mode.
* PVM-1350 hasno 16 : 9 mode.

1. Input a 525 monoscope signal.
2. Set :
   CONT ····· 80%
   BRT ····· 50%
3. Put the unit into service mode.
4. Roughly adjust [NOR H SIZE] so that the size is 15.75 frames.
5. Adjust the horizontal deflection section with [NOR PIN AMP], [NOR PIN PHASE], [NOR U/L PIN], [SEXY], [V BOW] and [V ANGLE].
   (While adjusting the pincushion distortion and bow distortion with V-ANGL and BOW, adjust so that the horizontal and vertical of the screen are straight lines.)
6. Put the unit into 16 : 9 mode.
7. Adjust with [16 : 9 NOR PIN AMP], [16 : 9 NOR PIN PHASE], and [16 : 9 NOR U/L PIN] in the same manner as in Item 5.

Normal H.Size Standards

	525	625
4 : 3	15.75 ± 0.2 frames	15.0 ± 0.2 frames
16 : 9	15.75 ± 0.2 frames	15.0 ± 0.2 frames

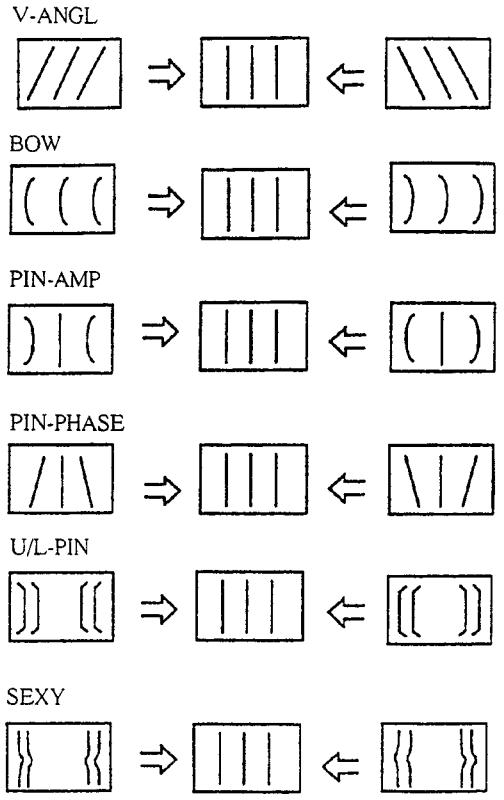

Fig. 4

7. HORIZONTAL DEFLECTION SECTION Adjustment (UNDER SCAN adjustment) (PVM-1351Q/1354Q only)

Standard value

	525	625
U/S H-SIZE V-SIZE	252 ± 2mm 188 ± 2mm	←
16 : 9 U/S V-SIZE	142 ± 2mm	←

8. H/V DELAY Adjustment

1. H-DELAY adjustment
   1) Input a 525 monoscope signal.
   2) Set :
      CONT····· 80%
      BRT·····50%
   3) Put the unit into H/V DELAY mode.
   4) Put the unit into service mode.
   5) Connect the oscilloscope probe to IC503 Pin 7, then adjust [H DELAY] so that the waveform is as in Fig. 5.
2. V-DELAY Adjustment
   1) Input a 525 monoscope signal.
   2) Set :
      CONT····· 80%
      BRT·····50%
   3) Put the unit into H/V DELAY mode.
   4) Put the unit into service mode.
   5) Connect the oscilloscope probe to IC502 Pin 7, then adjust [V DELAY] so that the waveform is as in Fig. 6.
3. Picture verification (PVM-1351Q/1354Q only)
   Verify that the picture is as in Fig. 7.

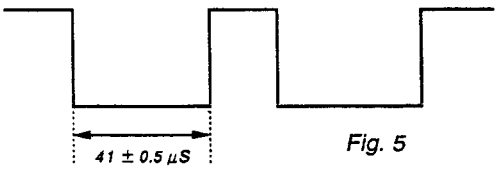

Fig. 5

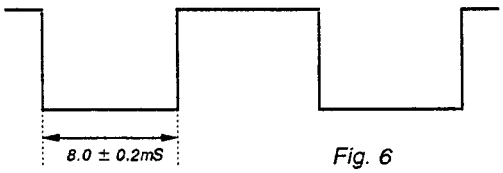

Fig. 6

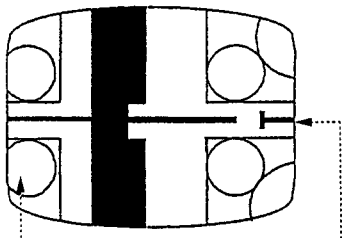

The small circle is slightly broken.

The picture is pretty much at the center.

Fig. 7

9. OSD POSITION Adjustment

1. Input a 525 color bar signal.
2. Connect the oscilloscope probes to TP300 (H-BLK) and IC104 Pin 14.
3. Adjust [OSD POSITION] so that the gap between the rising edge of the H-BLK waveform and the right edge character (the right edge of the " ▭ " for service mode [OSD POSITION]) is : 57 μS ± 0.2 μS

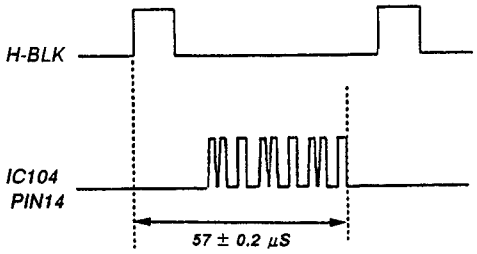

Fig. 8

10. WRITING THE ADJUSTMENT

1. Write the adjustment results into memory.
   Note : If you cut off the power before writing, the results of your adjustments are all lost.

III. SIGNAL SYSTEM ADJUSTMENT

1. NORM AL AND H/V DL SUB CON ADJUSTMENT

* PVM-1350 has neither 16 : 9 nor H/V-DL.

1. Input a vertical white line signal.
   Note : Use a vertical white line signal (525 no burst, H width 3μS, 100IRE).
2. Set :
   CONT ····· 80%
   BRT ····· 50%
3. Connect the oscilloscope probe to A board CN401 Pin 3.
4. Put the unit into service mode.
5. Provisionally input an adjustment value of 69 for SUB BRT.
6. Adjust the pedestal or the distance between the sync tip and white with SUB CON (4 : 3 NOR), SUB CON (4 : 3 H/V DELAY), SUB CON (16 : 9 NOR), and SUB CON (16 : 9 H/V DELAY).
   SUB CON (4 : 3 NOR). } (Fig. 9)
   SUB CON (16 : 9 NOR)
   SUB CON (4 : 3 H/V DELAY) } (Fig. 10).
   SUB CON (16 : 9 H/V DELAY)

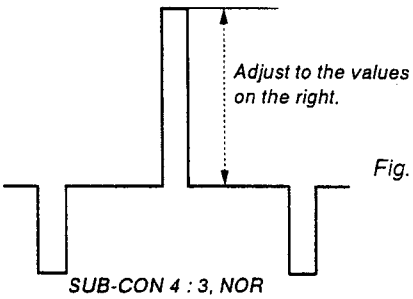

Fig. 9

SUB-CON 4 : 3, NOR
SUB-CON 16 : 9, NOR

	20″	14″	
		PVM-1354Q	PVM-1350/1351Q
4 : 3	1.55 Vp-p	1.50 Vp-p	1.40 Vp-p
16 : 9	1.40 Vp-p	1.33 Vp-p	1.24 Vp-p

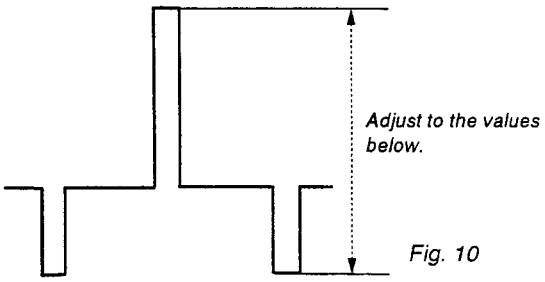

Fig. 10

SUB-CON 4 : 3, H/V-DL
SUB-CON 16 : 9, H/V-DL

	20″	14″	
		PVM-1354Q	PVM-1350/1351Q
4 : 3	1.55 Vp-p	1.50 Vp-p	1.40 Vp-p
16 : 9	1.40 Vp-p	1.33 Vp-p	1.24 Vp-p

2-1. SUB PHASE Adjustment (PVM-1351Q/1354Q only)

1. Input a component color bar (R-Y) and EXT SYNC (Beta 0 level signal).
2. Put the unit into Ext Sync mode.
3. Connect the oscilloscope probe to IC404 Pin 30 or TP402.
4. Put the unit into service mode.
5. Adjust SUB PHASE to minimize the output waveform (15 mVp-p max.) (Fig. 11)

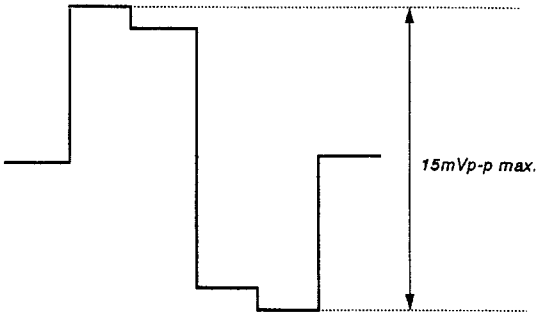

Fig. 11

2-2. SUB PHASE Adjustment (PVM-1350 only)

1. Input a NTSC color bar signal.
2. Connect between L309 and ground and between TP507 and a 5V line (L320 line).
3. Put the unit into service mode.
4. Adjust SUB PHASE to minimize the output waveform (15 mVp-p max.) (Fig. 11)

3-1. SUB CHROMA Adjustment (PVM-1351Q/1354Q only)

1. Input a component color bar (R-Y, Y, B-Y). (Beta 0 level signal).
2. From the menu, make the Component Level Beta 0.
3. Connect the oscilloscope probe to IC404 Pin 30 or TP402.
4. Put the unit into service mode.
5. Using SUB CHROMA NORMAL, adjust so that the tops of the waveform line up as in the diagram below. (Fig. 12)

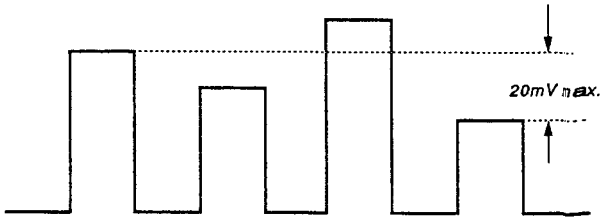

Adjust so that the levels of the first peak and the fourth peak are the same.

Fig. 12

3-2. SUB CHROMA Adjustment (PVM-1350 only)

1. Put the unit into service mode.
2. Input an adjustment value of 98 for SUB CHROMA NORMAL. (Fig. 12)

4. R-Y LEVEL ADJUSTMENT (PVM-1351Q/1354Q only)

1. Input a component color bar (R-Y, Y, B-Y). (Beta 0 level signal).
2. From the menu, make the Component Level Beta 0.
3. Connect the oscilloscope probe to IC404 Pin 41 or TP401.
4. Put the unit into service mode.
5. Using R-Y LEVEL COMPONENT, adjust so that the tops of the waveform line up as in the diagram below. (Fig. 13)

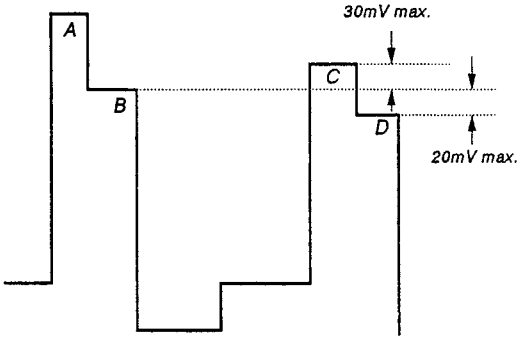

Fig. 13

Adjust so that B=D above (20 mV max.) Check that the difference between D and C is no greater than 30 mV

5. SUB CHROMA N10/SMPTE Adjustment (PVM-1351Q/1354Q only)

1. Input a component color bar (R-Y, Y, B-Y). (SMPTE level signal).
2. From the menu, make the Component Level N10/SMPTE.
3. Connect the oscilloscope probe to IC404 Pin 30 or TP402.
4. Put the unit into service mode.
5. In the same manner as in 4-5, adjust SUB CHROMA N10/SMPTE.

6. BURST GATE PULSE WIDTH Adjustment

1. Input an NTSC color bar.
2. Connect the oscilloscope probes to TP301 (COMP-SYNC) and Q363 or IC305 Pin 1. (Be careful! IC305 Pin 1 is a high-impedance line.)
3. Put the unit into service mode.
4. Adjust BGP WIDTH so that the output waveform has the relationship shown in Fig. 14.

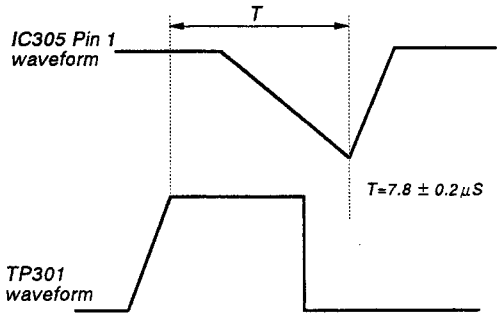

Fig. 14

7. VXO Adjustment

1. X'tal 358
   1) Input an NTSC color bar.
   2) Connect the frequency counter to IC305 Pin 21.
   3) Put the unit into service mode.
   4) Connect the circuit on the right to IC305 Pin 1.
   5) Adjust CRYSTAL 358 so that the counter reading meets the standard below. (You can also just adjust for where the color flicker stops.)

X'tal 358

Standard level 3.579545 ± 20Hz

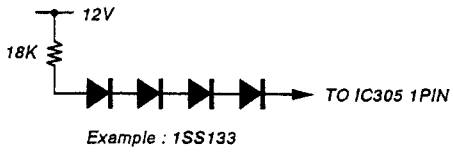

(For connecting to Pin 1, have the four diodes as close to Pin 1 as possible to reduce the length of the wires.)

2. X'tal 443 (PVM-1351Q/1354Q only)
   1) Input a 443 NTSC color bar.
   2) Connect the frequency counter to IC305 Pin 21.
   3) Put the unit into service mode.
   4) Connect to IC305 Pin 1 in the same manner as in 1-4).
   5) Adjust Crystal 443 in the same manner as in 1-5).

X'tal 443

Standard level 4.433619 ± 20Hz

8. NTSC COLOR DEMODULATION Adjustment

* The adjustment in 8-1-3) is not necessary for PVM-1351Q/1354Q.
* The adjustment in 8-1-4) is not necessary for PVM-1350.

1. NT 358 PHASE (NORMAL)
   1) Input an NTSC color bar.
   2) Connect the oscilloscope probe to TP306.
   3) Supply 4 VDC to IC305 Pin 4.
   4) Put the unit into H/V delay mode.
   5) Put the unit into service mode.
   6) Adjust PHASE NTSC 358 NOR so that the output waveform burst section is a straight line. (Fig. 15)

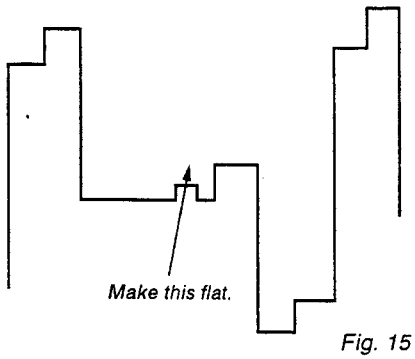

Fig. 15

2. NT358 PHASE (ACC OFF) (PVM-1351Q/1354Q only)
   1) Switch ACC Off with the menu.
   2) Adjust in the same manner as in 8-1 above, but adjust with PHASE NTSC 358 ACC OFF. (Fig. 15)

3. NT358 B-Y PHASE

The phase adjustment must be carried out before the chroma adjustment.

1) Input an NTSC color bar.
   (Input only the R-Y component. Have B-Y and Y off.)
2) Connect the oscilloscope probe to TP305.
3) Put the unit into service mode.
4) Adjust B-Y PHASE NTSC 358 so that the color components form a straight line.

4. NT358 CHROMA (NORMAL)

1) Input an NTSC color bar.
2) Connect the oscilloscope probe to IC404 Pin 30 or TP402.
3) Put the unit into service mode.
4) Using CHROMA NTSC 358 NOR, adjust so that the tops of the waveform line up as in the diagram below. (Fig. 16)

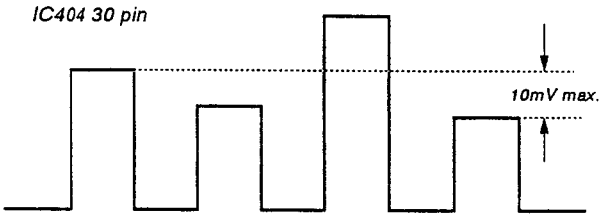

Fig. 16

Adjust so that the levels of the first peak and the fourth peak are the same.

5. NT 358 CHROMA (ACC OFF) (PVM-1351Q/1354Q only)

1) Switch ACC Off with the menu.
2) Adjust CHROMA NTSC 358 ACC OFF in the same manner as 8.-4 above. (Fig. 16)

6. NTSC 358 R-Y LEVEL

1) Input an NTSC358 color bar.
2) Connect the oscilloscope probe to IC404 Pin 41 or TP401.
3) Put the unit into service mode.
4) Using R-Y LEVEL NTSC 358, adjust so that the tops of the waveform line up as in the diagram below. (Fig. 17)

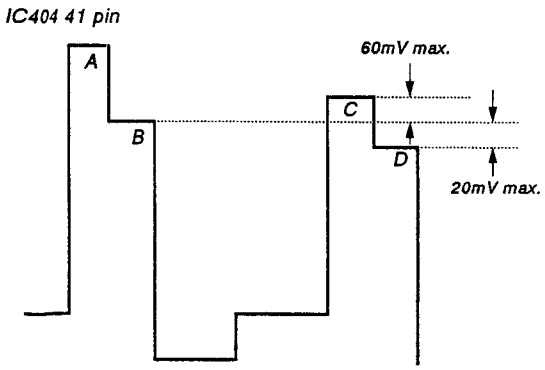

Fig. 17

Adjust so that B=D above (20 mV max.) Check that the difference between B and C is no greater than 60 mV.

7. NTSC 443 PHASE (NORMAL) (PVM-1351Q/1354Q only)

* The adjustment in 8-7-3) is not necessary for PVM-1351Q/1354Q.

1) Input an NTSC 443 color bar.
2) Connect the oscilloscope probe to TP306.
3) Supply 4 VDC to IC305 Pin 4.
4) Put the unit into H/V delay mode.
5) Put the unit into service mode.
6) Adjust PHASE NTSC 443 NOR so that the output waveform burst section is a straight line. (Fig. 18)

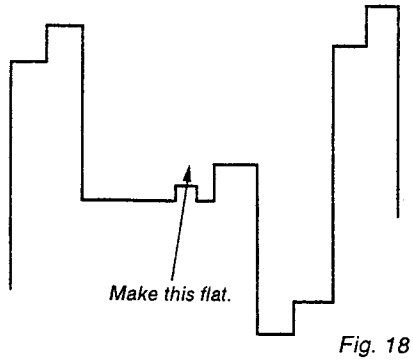

Fig. 18

8. NTSC 443 PHASE (ACC OFF) (PVM-1351Q/1354Q only)

1) Switch ACC Off with the menu.
2) Adjust PHASE NTSC 443 ACC OFF in the same manner as in 7-5). above. (Fig. 20)

9. NTSC 443 B-Y PHASE (PVM-1351Q/1354Q only)
   NTSC 443 CHROMA NOR

1) Input an NTSC 443 color bar.
2) Connect the oscilloscope probe to TP402.
3) Put the unit into service mode.
4) Adjust B-Y PHASE NTSC 443 and CHROMA NTSC 443 NOR so that the tracking is normal and the tops of the waveform line up. (Fig. 19)

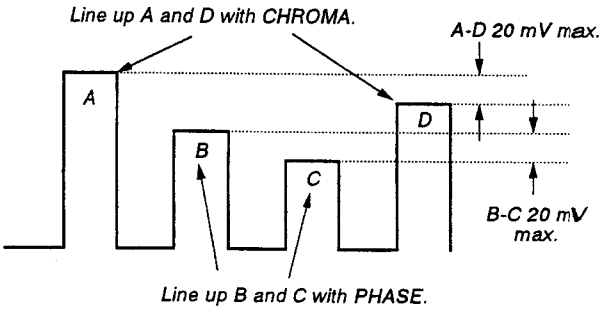

Fig. 19

10. NTSC 443 CHROMA (ACC OFF) (PVM-1351Q/1354Q only)

1) Switch ACC Off with the menu.
2) Adjust CHROMA NTSC 443 ACC OFF in the same manner as 9-4). (Fig. 22)

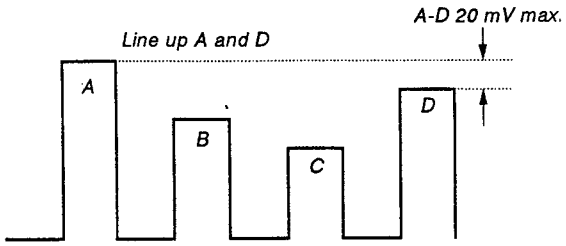

Fig. 20

11. NTSC 443 R-Y LEVEL (PVM-1351Q/1354Q only)
1) Input an NTSC 443 color bar.
2) Connect the oscilloscope probe to TP401.
3) Put the unit into service mode.
4) Adjust R-Y LEVEL NTSC 443 in the same manner as 6-4). (Fig. 17)

12. PAL PHASE (NORMAL) (PVM-1351Q/1354Q only)
1) Input a PAL SP color bar.
2) Connect the oscilloscope probe to TP306.
3) Put the unit into service mode.
4) Adjust PHASE PAL NOR so that the B-Y anti-PAL signal waveform is 0. (Fig. 21)

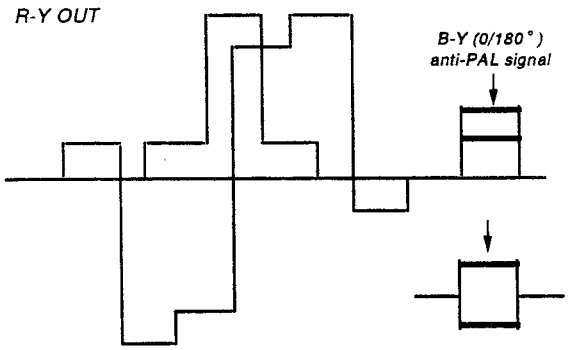

∗ Varies every H, although slightly, so adjust so that the average is 0.

Fig. 21

13. PLL PHASE (ACC OFF) (PVM-1351Q/1354Q only)
1) Switch ACC Off with the menu.
2) Adjust PHASE PAL ACC OFF in the same manner as 12-4).

14. PAL B-Y PHASE (PVM-1351Q/1354Q only)
1) Input a PAL SP color bar.
2) Connect the oscilloscope probe to TP305.
3) Put the unit into service mode.
4) Adjust B-Y PHASE PAL so that the B-Y anti-PAL signal waveform is 0. (Fig. 22)

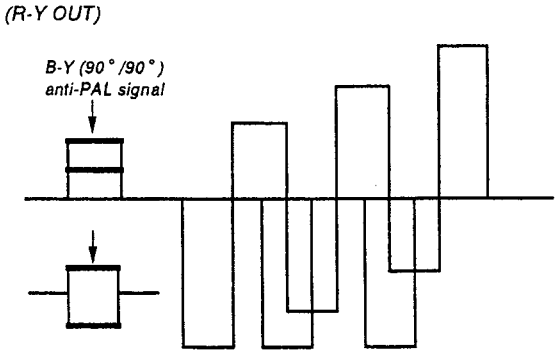

∗ Varies every H, although slightly, so adjust so that the average is 0.

Fig. 22

15. PAL CHROMA (NORMAL) (PVM-1351Q/1354Q only)
1) Input a PAL color bar.
2) Connect the oscilloscope probe to IC404 Pin 30 or TP402.
3) Put the unit into service mode.
4) Adjust CHROMA PAL NOR so that the tops of the waveform line up. (Fig. 23)

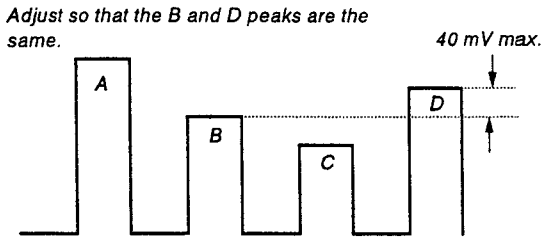

Fig. 23

16. PAL CHROMA (ACC OFF) (PVM-1351Q/1354Q only)
1) Switch ACC Off with the menu.
2) Adjust CHROMA PAL ACC OFF in the same manner as 15.-4). (Fig. 23)

17. PAL R-Y LEVEL (PVM-1351Q/1354Q only)
1) Input a PAL color bar.
2) Connect the oscilloscope probe to IC404 Pin 41 or TP401.
3) Put the unit into service mode.
4) Adjust R-Y LEVEL PAL so that the tops of the waveform line up as in the diagram below. (Fig. 24)

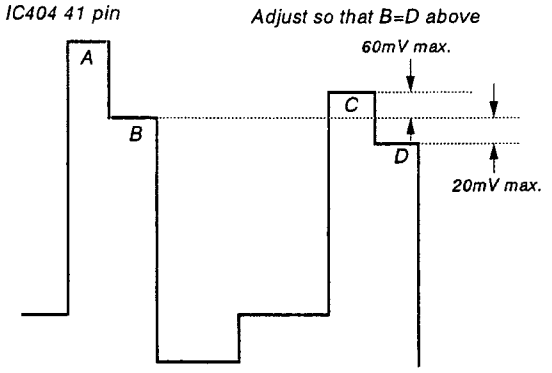

Fig. 24

9. SECAM Adjustmnet

* This must be done after the deflection adjustment.

Note : Varies with H-FREQ, H-BLK, VIDEO-PHASE, ANGLE, BOW, H-DELAY, etc.

1. HP EIDTH (NORMAL) ADJUSMTNET (PVM-1351Q/1354Q only)

The board adjustment in 9.-1. is a rough adjustment and this may also be managed with the IC317 Pin 10 pulse width.
1) Input a SECAM color bar.
2) Put the unit into under scan mode.
3) Put the unit into service mode.
4) Adjust HP WIDTH NOR so that the color of the color section at the top left of the screen almost disappears.

2. HP POSITIOM ADJUSMTNET (PVM-1351Q/1354Q only)

Note : 9.-2. is the same as above. This adjustment can be managed with the phase relationship between the start of the pulse at IC317 Pin 10 and the input video signal.
1) Input a SECAM color bar.
2) Put the unit into H/V delay mode.
3) Put the unit into service mode.
4) Adjust HP POSITION as in the diagram on the right.

3. HP WIDTH (H/V -DL) ADJUSMTNET (PVM-1351Q/1354Q only)
1) Input a SECAM color bar.
2) Put the unit into H/V delay mode.
3) Put the unit into service mode.
4) Adjust HP WIDTH H/V DELAY as in the diagram below.

Note : Check the HP POSITION and if it is off, repeat 2 and 3.

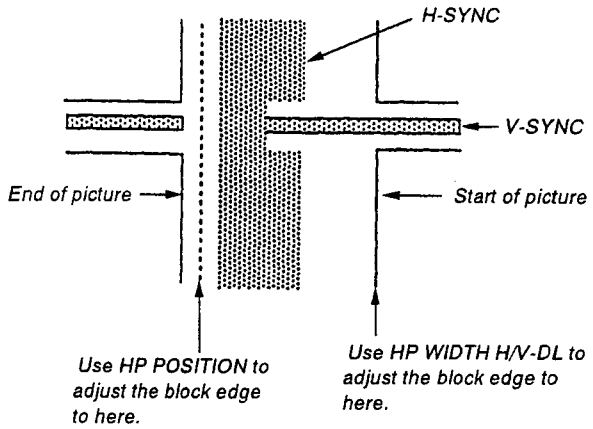

4. SECAM COL BALANCE (PVM-1351Q/1354Q only)
1) Input a SECAM color bar.
2) Connect the oscilloscope probe to TP306.
3) Put the unit into service mode.
4) Adjust SECAM COLOR BALANCE R-Y so that the non-color section forms a straight line.
5) Connect the oscilloscope probe to TP305.
6) Adjust SECAM COLOR BALANCE B-Y so that the non-color section forms a straight line.

5. SECAM CHROMA (PVM-1351Q/1354Q only)
1) Input a SECAM color bar.
2) Connect the oscilloscope probe to IC404 Pin 30 or TP402.
3) Put the unit into service mode.
4) Adjust CHROMA SECAM so that the tops of the waveform line up as in the diagram below. (Fig. 25)

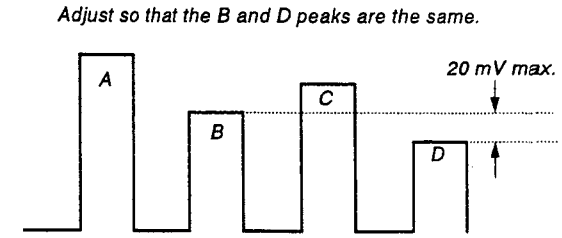

Fig. 25

6. SECAM R-Y LEVEL (PVM-1351Q/1354Q only)
1) Input a SECAM color bar.
2) Connect the oscilloscope probe to IC404 Pin 41 or TP401.
3) Put the unit into service mode.
4) Adjust R-Y LEVE SECAM so that the tops of the waveform line up as in the diagram below. (Fig. 26)

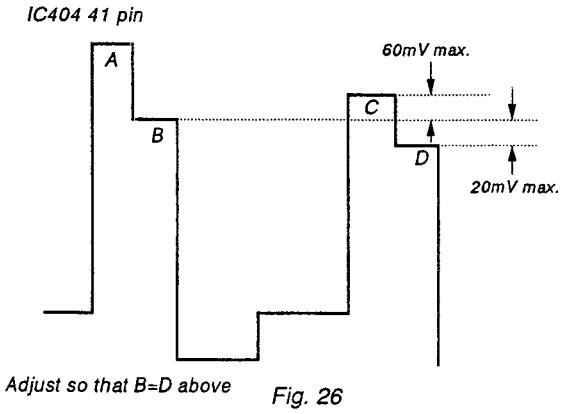

Fig. 26

10. Writing the adjustment results

1. Write the adjustment results into memory.

5-2. G BOARD ADJUSTMENT

G BOARD – COMPONENT SIDE –

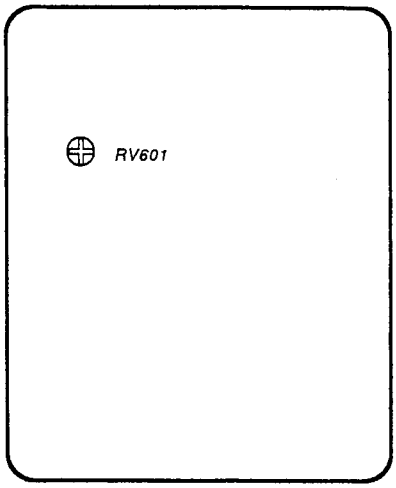

1. Checking the output lines
1) Input a color bar signal.
2) Adjust RV601 so that the +B voltage is 115 ± 0.1 V.
3) Check that the output lines meet the standards below.

15V	16.0 ± 1.0V
5V(A)	5.0 ± 0.3V
5V(B)	5.0 ± 0.5V
7V	7.2 ± 0.5V
– 15V	– 16.3 ± 1.0V

MEMO

SECTION 6
DIAGRAMS

6-1. BLOCK DIAGRAMS (1)

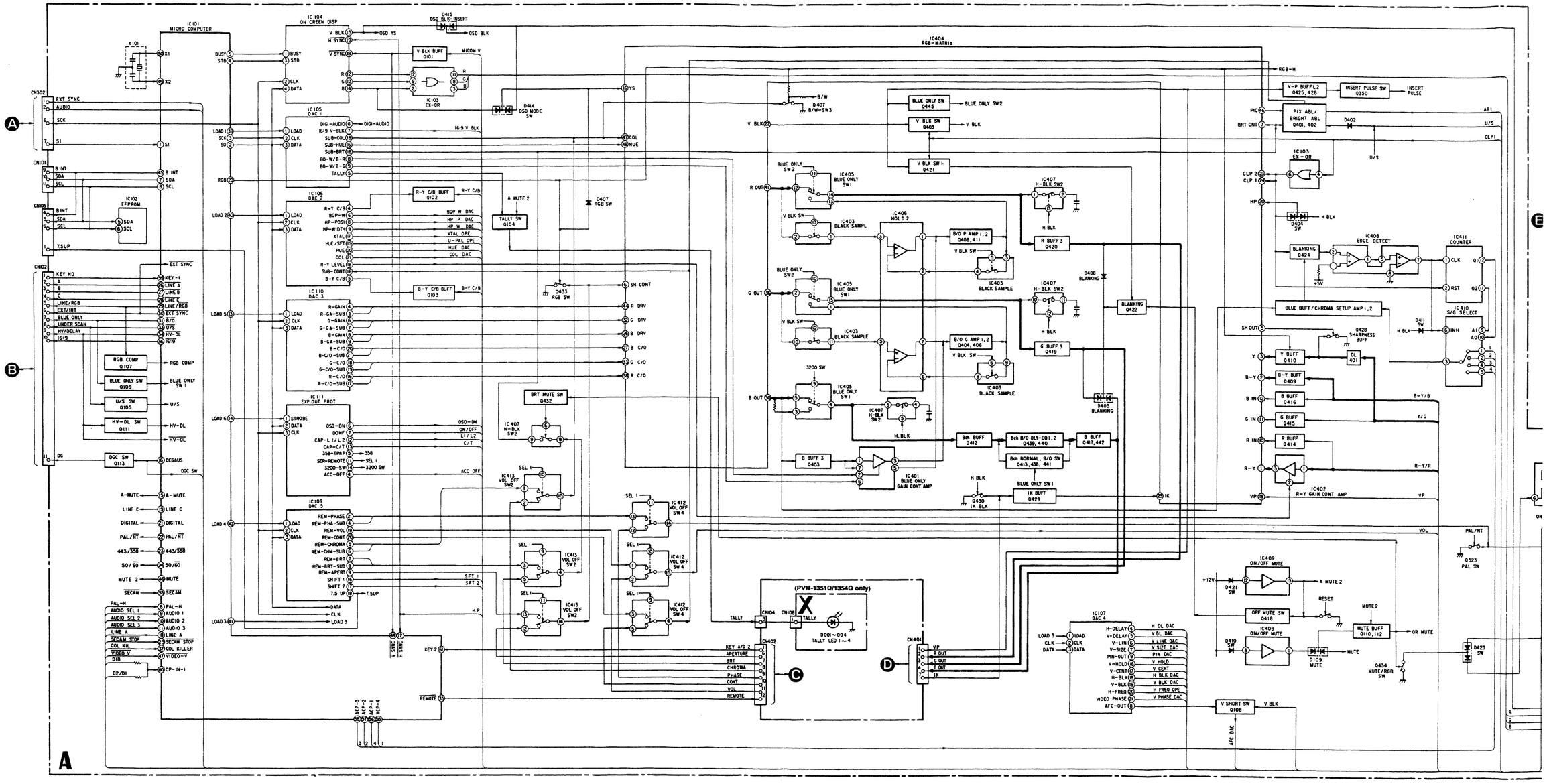

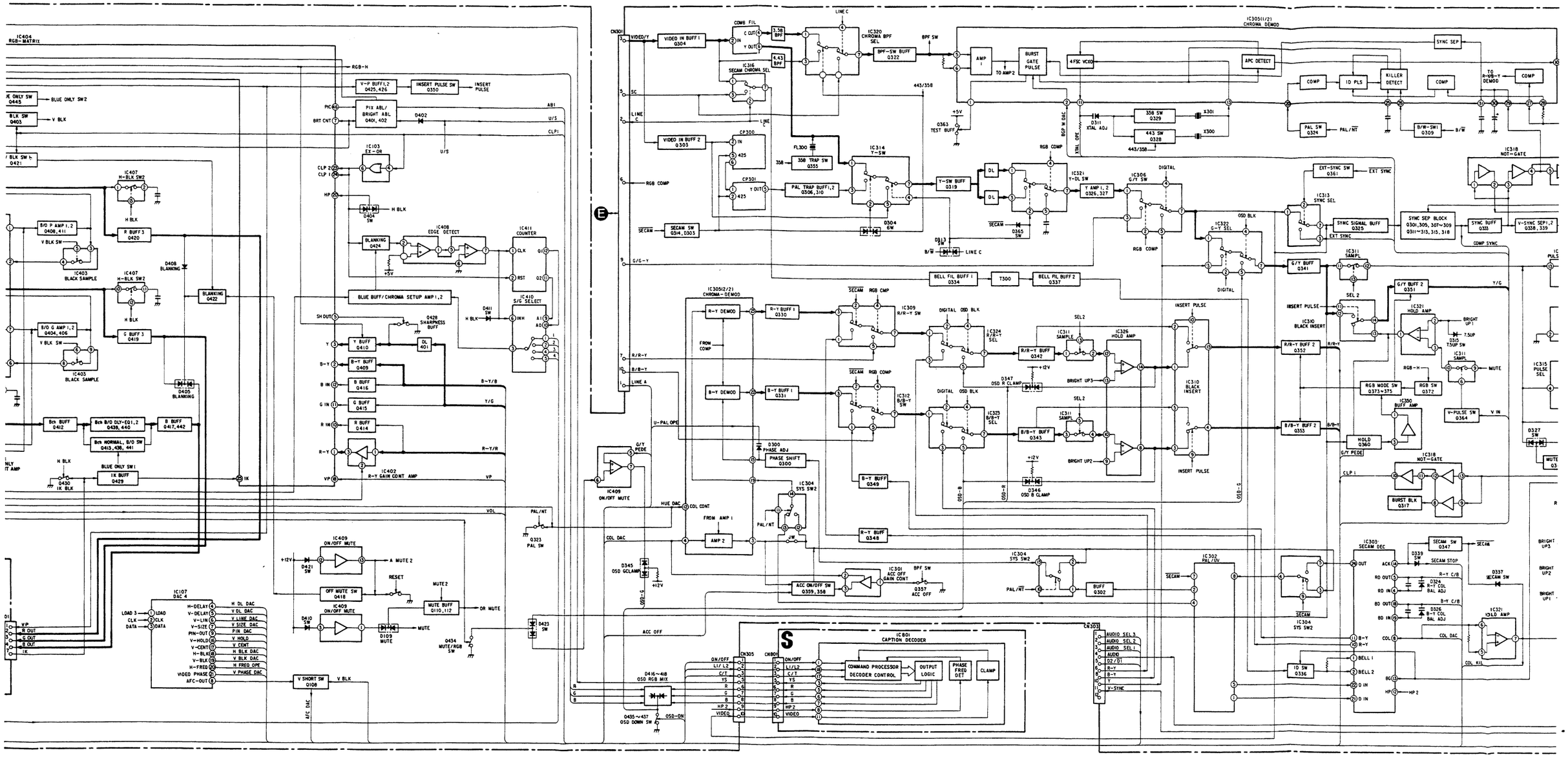
IC404 RGB-MATRIX
IC407 H-BLK SW2
IC403 BLACK SAMPLE
IC103 EX-OR
IC408 EDGE DETECT
IC411 COUNTER
IC410 S/O SELECT
IC409 ON/OFF MUTE
IC402 R-Y GAIN CONT AMP
IC107 DAC 4
IC305(1/2) CHROMA DEMOD
IC305(2/2) CHROMA-DEMOD
IC320 CHROMA BPF SEL
IC316 SECAM CHROMA SEL
IC314 Y-SW
IC321 Y-DL SW
IC306 G/Y SW
IC322 G-Y SEL
IC313 SYNC SEL
IC311 SAMPL
IC310 BLACK INSERT
IC321 HOLD AMP
IC309 R/R-Y SW
IC312 B/B-Y SW
IC324 R/R-Y SEL
IC323 B/B-Y SEL
IC326 HOLD AMP
IC304 SYS SW2
IC301 ACC OFF GAIN CONT
IC302 PAL/DV
IC303 SECAM DEC
IC318 NOT-GATE
IC350 BUFF AMP
IC315 PULSE SEL
IC801 CAPTION DECODER
COMMAND PROCESSOR DECODER CONTROL
OUTPUT LOGIC
PHASE FREQ DET
CLAMP
CN301
CN303
CN305
CN801
VIDEO/Y
SC
LINE C
RGB COMP
SECAM
G/G-Y
R/R-Y
B/B-Y
LINE A
VIDEO IN BUFF 1 Q304
VIDEO IN BUFF 2 Q303
BPF-SW BUFF Q322
Y-SW BUFF Q319
PAL TRAP BUFF1,2 Q306,310
BELL FIL BUFF 1 Q334
BELL FIL BUFF 2 Q337
R-Y BUFF 1 Q330
B-Y BUFF 1 Q331
R-Y BUFF Q342
B/B-Y BUFF Q343
PHASE SHIFT Q300
R-Y BUFF Q349
R-Y BUFF Q348
ACC ON/OFF SW Q359,358
BUFF Q302
G/Y BUFF Q341
R/R-Y BUFF 2 Q352
B/B-Y BUFF 2 Q353
SYNC SIGNAL BUFF Q325
SYNC BUFF Q333
SYNC SEP BLOCK Q301,305,307~309 Q311~313,315,318
V-SYNC SEP1,2 Q338,339
RGB MODE SW Q373~375
RGB SW Q372
V-PULSE SW Q364
HOLD Q360
BURST BLK Q317
SECAM SW Q347
SECAM STOP
R-Y C/B BAL ADJ
B-Y C/B BAL ADJ
COL DAC
COL KIL
BELL 1
BELL 2
D IN
HP 2
AUDIO SEL 3
AUDIO SEL 2
AUDIO SEL 1
AUDIO
D2/D1
R-Y
B-Y
Y
V-SYNC
ON/OFF
L1/L2
C/T
YS
R
G
B
HP 2
VIDEO
V-P BUFF1,2 Q425,426
INSERT PULSE SW Q350
INSERT PULSE
PIX ABL/ BRIGHT ABL Q401,402
BLUE BUFF/CHROMA SETUP AMP1,2
Y BUFF Q410
B-Y BUFF Q409
B BUFF Q416
G BUFF Q415
R BUFF Q414
DL Q401
B/O P AMP 1,2 Q408,411
R BUFF 3 Q420
B/O G AMP 1,2 Q404,406
G BUFF 3 Q419
8ch BUFF Q412
8ch B/O DLY-EQ1,2 Q439,440
8ch NORMAL, B/O SW Q413,438,441
B BUFF Q417,442
BLUE ONLY SW1
1K BUFF Q429
OFF MUTE SW Q418
MUTE BUFF Q110,112
V SHORT SW Q108
A MUTE 2
RESET
MUTE2
OR MUTE
MUTE
PAL/NT
AFC DAC
ACC OFF
HUE DAC
COL CONT
COL DAC
FROM AMP 1
AMP 2
U-PAL OPE
BURST GATE PULSE
4FSC VCXO
APC DETECT
SYNC SEP
COMP
ID PLS
KILLER DETECT
PAL SW Q324
B/W-SW1 Q309
EXT-SYNC SW Q361
EXT SYNC
COMP SYNC
OSD BLK
DIGITAL
INSERT PULSE
BRIGHT UP1
BRIGHT UP2
BRIGHT UP3
MUTE
ID SW Q336
D416~418 OSD RGB MIX
D435~437 OSD DOWN SW
OSD-DN
D345 OSD GCLAMP
D347 OSD R CLAMP
D346 OSD B CLAMP
D300 PHASE ADJ
D311 XTAL ADJ
D363 TEST BUFF
D364 SW
D365 SW
D404 SW
D405 BLANKING
D408 BLANKING
D411 SW
D421 SW
D423 SW
D410 SW
D109 MUTE
D323 PAL SW
D434 MUTE/RGB SW
D428 SHARPNESS BUFF
D430 1K BLK
D339 SW
D337 SECAM SW
D324 R-Y C/B BAL ADJ
D326 B-Y C/B BAL ADJ
D327 SW
D313 7.5UP SW
D347 OSD R CLAMP
D346 OSD B CLAMP
FL300
CP300
CP301
358 TRAP SW Q355
358 SW Q329
443 SW Q328
X301
X300
443/358
+5V
+12V
H BLK
V BLK
LINE C
LINE A
RGB-H
Y/G
R-Y/R
B-Y/B
VP
VOL
IK
LOAD 3
CLK
DATA
H-DELAY
V-DELAY
V-LIN
V-SIZE
PIN-OUT
V-HOLD
V-CENT
H-BLK
V-BLK
H-FREQ
VIDEO PHASE
AFC-OUT
H DL DAC
V DL DAC
V LINE DAC
V SIZE DAC
PIN DAC
V HOLD
V CENT
H BLK DAC
V BLK DAC
H FREQ DAC
V PHASE DAC
R OUT
G OUT
B OUT
IK

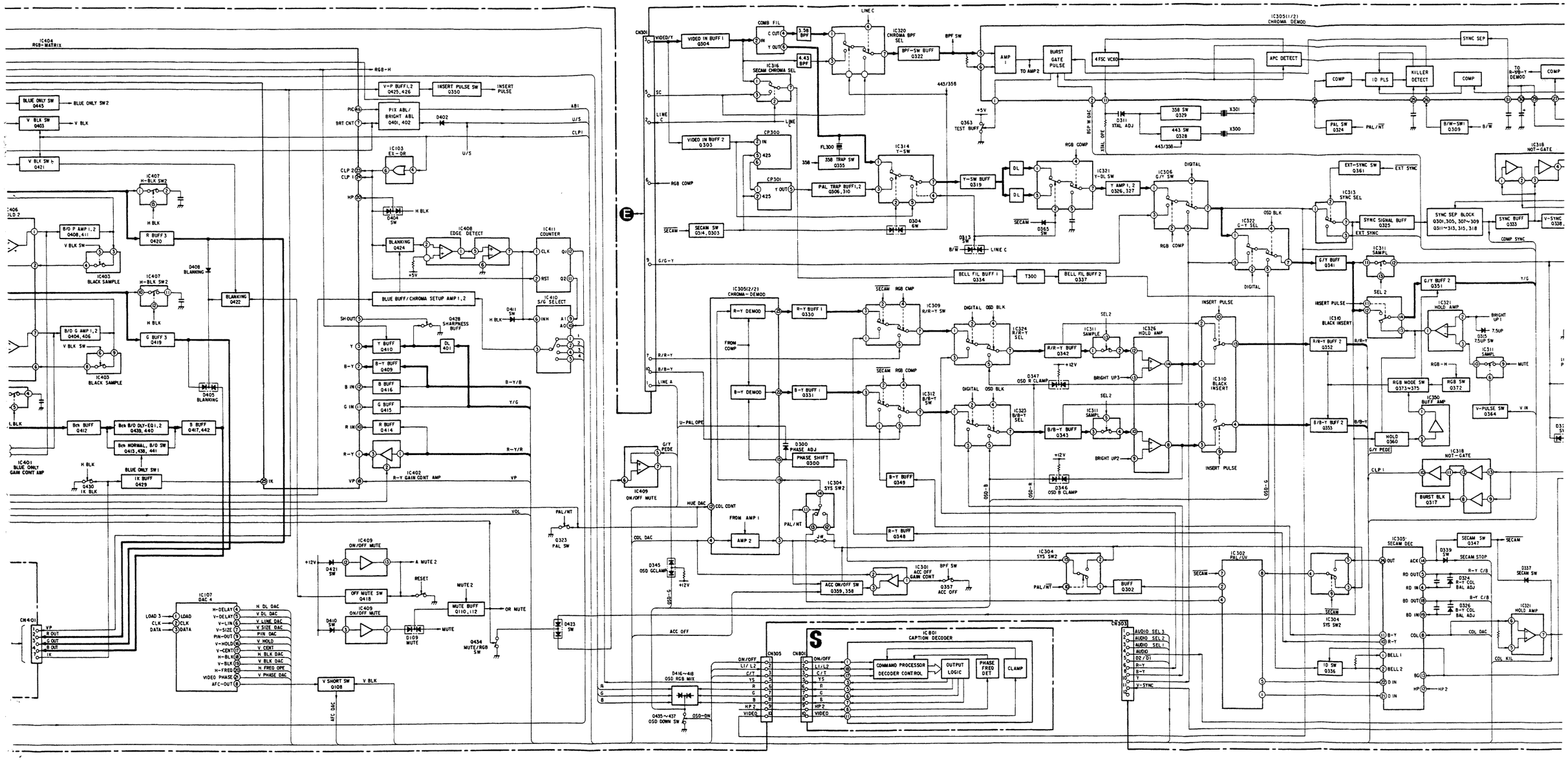
IC404 RGB-MATRIX
IC407 H-BLK SW2
IC403 BLACK SAMPLE
IC401 BLUE ONLY GAIN CONT AMP
IC103 EX-OR
IC408 EDGE DETECT
IC411 COUNTER
IC410 S/G SELECT
IC402 R-Y GAIN CONT AMP
IC409 ON/OFF MUTE
IC107 DAC 4
IC305(2/2) CHROMA-DEMOD
IC320 CHROMA BPF SEL
IC316 SECAM CHROMA SEL
IC314 Y-SW
IC321 Y-DL SW
IC306 G/Y SW
IC322 G-Y SEL
IC313 SYNC SEL
IC309 R/R-Y SW
IC312 B/B-Y SW
IC324 R/R-Y SEL
IC323 B/B-Y SEL
IC304 SYS SW2
IC301 ACC OFF GAIN CONT
IC302 PAL/UV
IC310 BLACK INSERT
IC311 SAMPL
IC326 HOLD AMP
IC321 HOLD AMP
IC350 BUFF AMP
IC318 NOT-GATE
IC305 SECAM DEC
IC801 CAPTION DECODER
COMMAND PROCESSOR DECODER CONTROL
OUTPUT LOGIC
PHASE FREQ DET
CLAMP
S
CN401
CN301
CN303
CN305
CN801
VIDEO IN BUFF 1 Q304
VIDEO IN BUFF 2 Q303
BPF-SW BUFF Q322
AMP 1
BURST GATE PULSE
4FSC VCXO
APC DETECT
SYNC SEP
KILLER DETECT
ID PLS
COMP
PAL SW Q324
B/W-SW1 Q309
358 SW Q329
443 SW Q328
358 TRAP SW Q355
PAL TRAP BUFF1,2 Q306,310
Y-SW BUFF Q319
Y AMP 1, 2 Q326,327
SECAM SW Q314,Q303
EXT-SYNC SW Q361
SYNC SIGNAL BUFF Q325
SYNC SEP BLOCK Q301,305,307~309 Q311~313,315,318
SYNC BUFF Q333
V-SYNC Q338
G/Y BUFF Q341
G/Y BUFF 2 Q351
R/B-Y BUFF 2 Q352
B/B-Y BUFF 2 Q353
RGB MODE SW Q373~375
RGB SW Q372
V-PULSE SW Q364
HOLD Q360
BURST BLK Q317
SECAM SW Q347
BELL FIL BUFF 1 Q334
BELL FIL BUFF 2 Q337
T300
R-Y DEMOD
B-Y DEMOD
R-Y BUFF 1 Q330
B-Y BUFF 1 Q331
R-Y BUFF Q342
B-Y BUFF Q343
B-Y BUFF Q349
R-Y BUFF Q348
PHASE SHIFT Q300
AMP 2
ACC ON/OFF SW Q359,358
BUFF Q302
ID SW Q336
V SHORT SW Q108
MUTE BUFF Q110,112
OFF MUTE SW Q418
OSD RGB MIX
OSD DOWN SW
OSD GCLAMP
OSD B CLAMP
OSD R CLAMP
ON/OFF
L1/L2
C/T
Y5
R
G
B
HP2
VIDEO
AUDIO SEL 3
AUDIO SEL 2
AUDIO SEL 1
AUDIO
D2/D1
B-Y
Y
V-SYNC
BELL 1
BELL 2
D IN
COL DAC
COL KIL
HP2

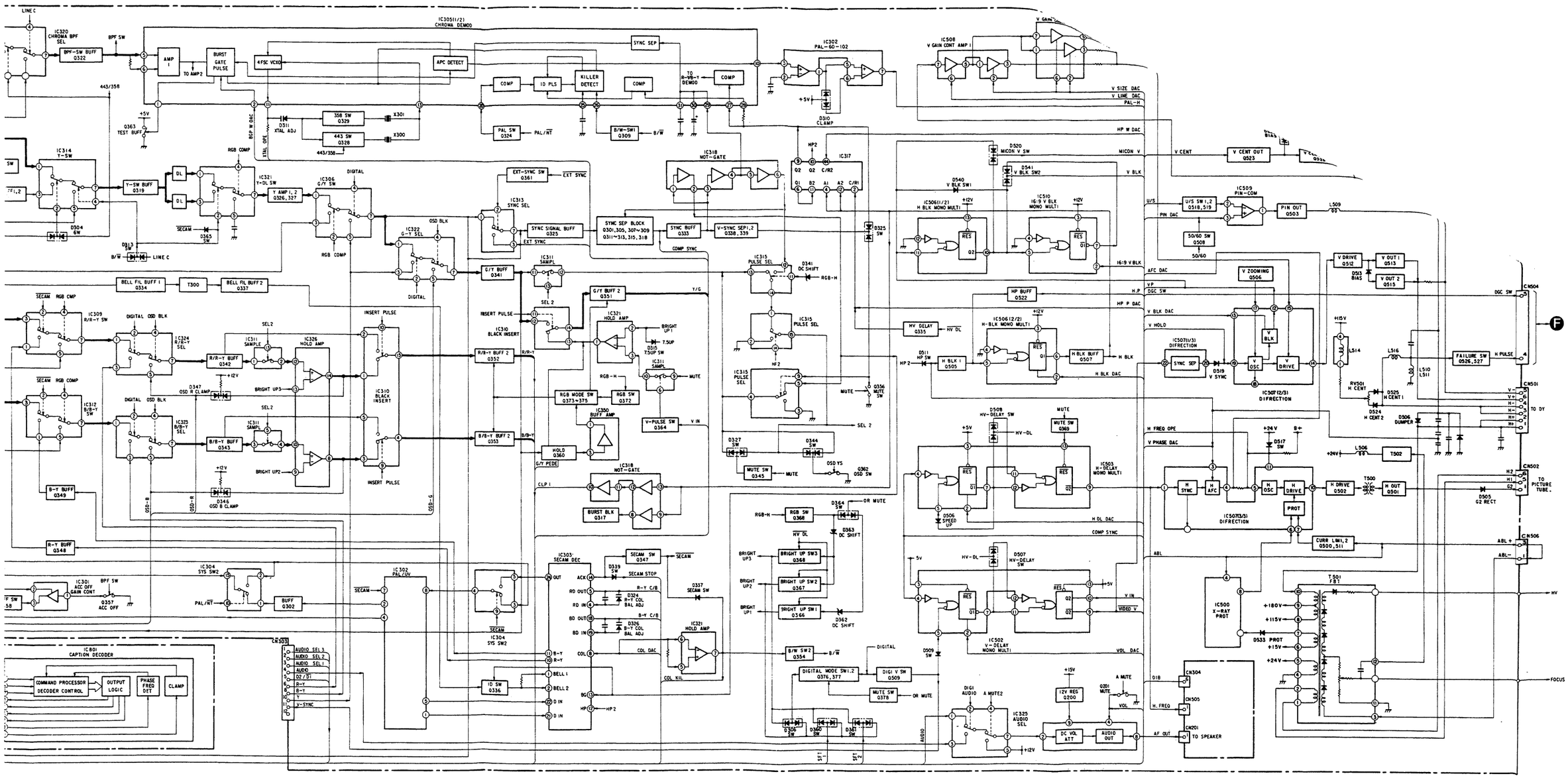
IC320 CHROMA BPF SEL
BPF-SW BUFF Q322
BPF SW
AMP 1
BURST GATE PULSE
4FSC VCXO
IC3051(1/2) CHROMA DEMOD
APC DETECT
SYNC SEP
COMP
ID PLS
KILLER DETECT
TO R-YB-Y DEMOD
IC302 PAL-60-102
IC508 V GAIN CONT AMP 1
V SIZE DAC
V LINE DAC
PAL-H
HP W DAC
MICON V
V CENT
V CENT OUT Q523
358 SW Q329
443 SW Q328
X301
X300
PAL SW Q324
PAL/NT
B/W-SW1 Q309
B/W
D311 XTAL ADJ
Q363 TEST BUFF
IC314 Y-SW
Y-SW BUFF Q319
IC321 Y-DL SW
Y AMP 1, 2 Q326, 327
IC306 G/Y SW
IC318 NOT-GATE
IC317
D310 CLAMP
D520 MICON V SW
D541 V BLK SW2
D540 V BLK SW1
IC506(1/2) H BLK MONO MULTI
IC510 16:9 V BLK MONO MULTI
V BLK
16:9 V BLK
AFC DAC
IC509 PIN-COM
U/S SW 1, 2 Q518, 519
PIN OUT Q503
L509
50/60 SW Q508
50/60
EXT-SYNC SW Q361
EXT SYNC
IC313 SYNC SEL
SYNC SIGNAL BUFF Q325
SYNC SEP BLOCK Q301, 305, 307~309 Q311~313, 315, 318
SYNC BUFF Q333
V-SYNC SEP 1, 2 Q338, 339
COMP SYNC
D325 SW
IC322 G-Y SEL
OSD BLK
RGB COMP
DIGITAL
D365 SW
D313 SW
LINE C
BELL FIL BUFF 1 Q334
T300
BELL FIL BUFF 2 Q337
G/Y BUFF Q341
IC311 SAMPL
IC315 PULSE SEL
D341 DC SHIFT
RGB-H
G/Y BUFF 2 Q351
Y/G
IC321 HOLD AMP
BRIGHT UP1
D315 7.5UP SW
IC311 SAMPL
MUTE
IC309 R/B-Y SW
IC324 R/B-Y SEL
R/B-Y BUFF Q342
IC326 HOLD AMP
INSERT PULSE
IC310 BLACK INSERT
R/B-Y BUFF 2 Q352
R/B-Y
RGB MODE SW Q373~375
RGB SW Q372
IC350 BUFF AMP
V-PULSE SW Q364
V IN
HP BUFF Q522
HV DELAY Q335
HV DL
IC506(2/2) H-BLK MONO MULTI
IC507(1/3) DIFRECTION
V ZOOMING Q506
V DRIVE Q512
V OUT 1 Q513
V OUT 2 Q515
D513 BIAS
V BLK DAC
V HOLD
H.P
DGC SW
HP P DAC
D511 HP SW
HP2
H BLK 1 Q505
H BLK BUFF Q507
H BLK
H BLK DAC
IC507(2/3) DIFRECTION
D519 V SYNC
FAILURE SW Q526, 327
H PULSE
CN504
CN501
TO DY
IC312 B/B-Y SW
IC323 B/B-Y SEL
B/B-Y BUFF Q343
IC311 SAMPL
BRIGHT UP3
BRIGHT UP2
D347 OSD R CLAMP
D346 OSD B CLAMP
SEL 2
B/B-Y BUFF 2 Q353
B/B-Y
HOLD Q360
G/Y PEDE
IC318 NOT-GATE
CLP 1
BURST BLK Q317
MUTE SW Q369
MUTE
D508 HV-DELAY SW
HV-DL
IC503 H-DELAY MONO MULTI
H FREQ OPE
V PHASE DAC
+24V
D517 SW
L506
T502
H SYNC
H AFC
H OSC
H DRIVE
H DRIVE Q502
T500
H OUT Q501
IC507(3/3) DIFRECTION
PROT
D505 G2 RECT
CN502
TO PICTURE TUBE
B-Y BUFF Q349
R-Y BUFF Q348
IC301 ACC OFF GAIN CONT
BPF SW
Q357 ACC OFF
IC304 SYS SW2
PAL/NT
BUFF Q302
IC302 PAL/UV
SECAM
IC303 SECAM DEC
SECAM SW Q347
D339 SW
SECAM STOP
D337 SECAM SW
IC321 HOLD AMP
R-Y C/B
D324 R-Y COL BAL ADJ
B-Y C/B
D326 B-Y COL BAL ADJ
COL DAC
COL KIL
ID SW Q336
HP2
D364 SW
OR MUTE
D363 DC SHIFT
RGB SW Q368
BRIGHT UP SW3 Q368
BRIGHT UP SW2 Q367
BRIGHT UP SW1 Q366
D362 DC SHIFT
B/W SW2 Q354
B/W
DIGITAL
DIGITAL MODE SW 1, 2 Q376, 377
DIGI V SW Q509
MUTE SW Q378
D306 SW
D360 SW
D361 SW
D507 HV-DELAY SW
IC502 V-DELAY MONO MULTI
VIDEO V
VOL DAC
D509 SW
IC325 AUDIO SEL
DIGI AUDIO
A MUTE2
AUDIO
12V REG Q200
A MUTE
Q201 MUTE
VOL
DC VOL ATT
AUDIO OUT
AF OUT
CN304
CN505
CN201
TO SPEAKER
H. FREQ
D1B
IC500 X-RAY PROT
CURR LIM 1, 2 Q500, 511
ABL
ABL+
ABL−
CN506
T501 FBT
+180V
+115V
+15V
+24V
D533 PROT
HV
FOCUS
IC801 CAPTION DECODER
COMMAND PROCESSOR DECODER CONTROL
OUTPUT LOGIC
PHASE FRED DET
CLAMP
CN503
AUDIO SEL 3
AUDIO SEL 2
AUDIO SEL 1
AUDIO
D2/B1
R-Y
B-Y
Y
V-SYNC
B-Y
R-Y
BELL 1
BELL 2
D IN
D IN
OUT
ACK
RD OUT
RD IN
BD OUT
BD IN
COL
BG
HP
F

BLOCK DIAGRAMS (2)

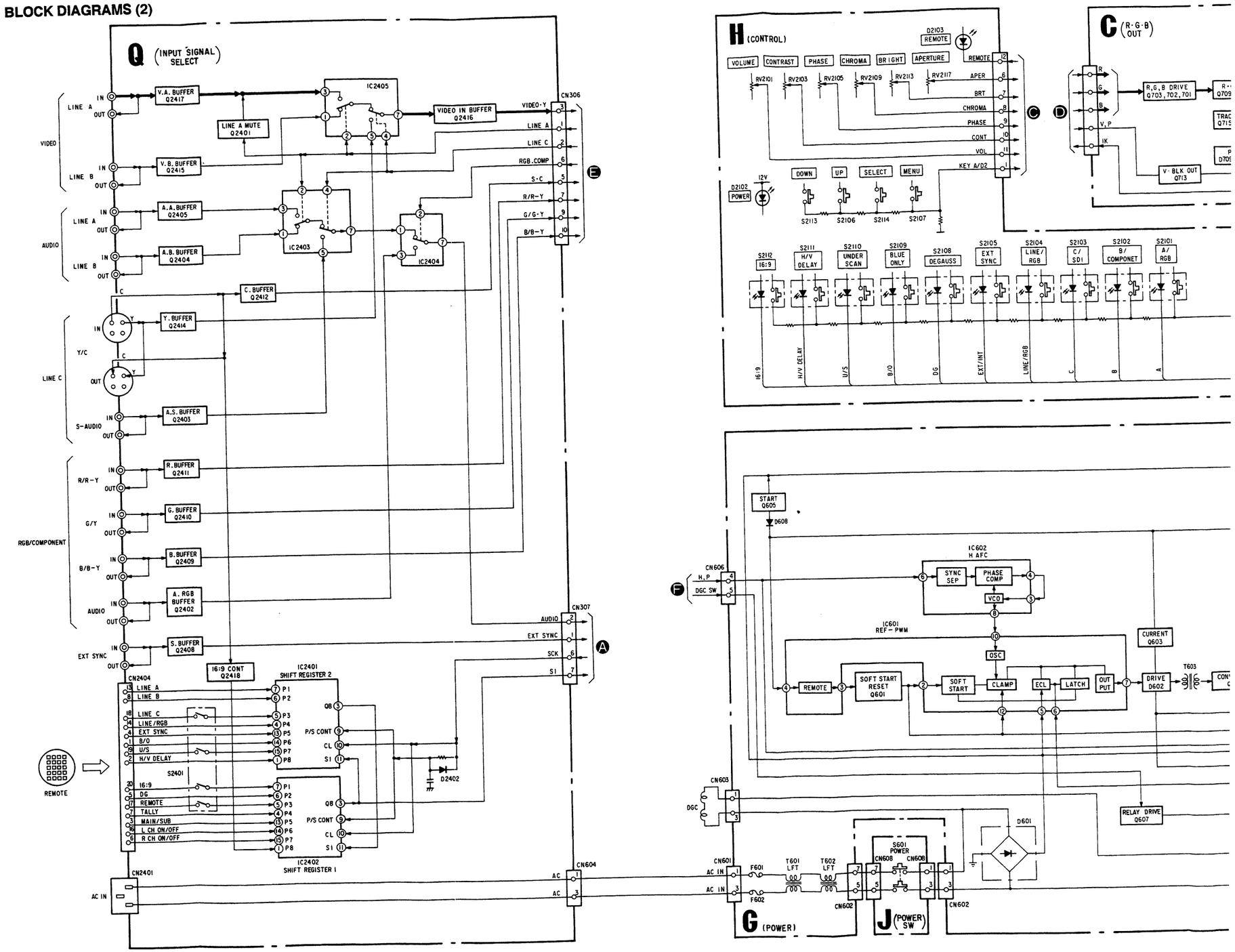

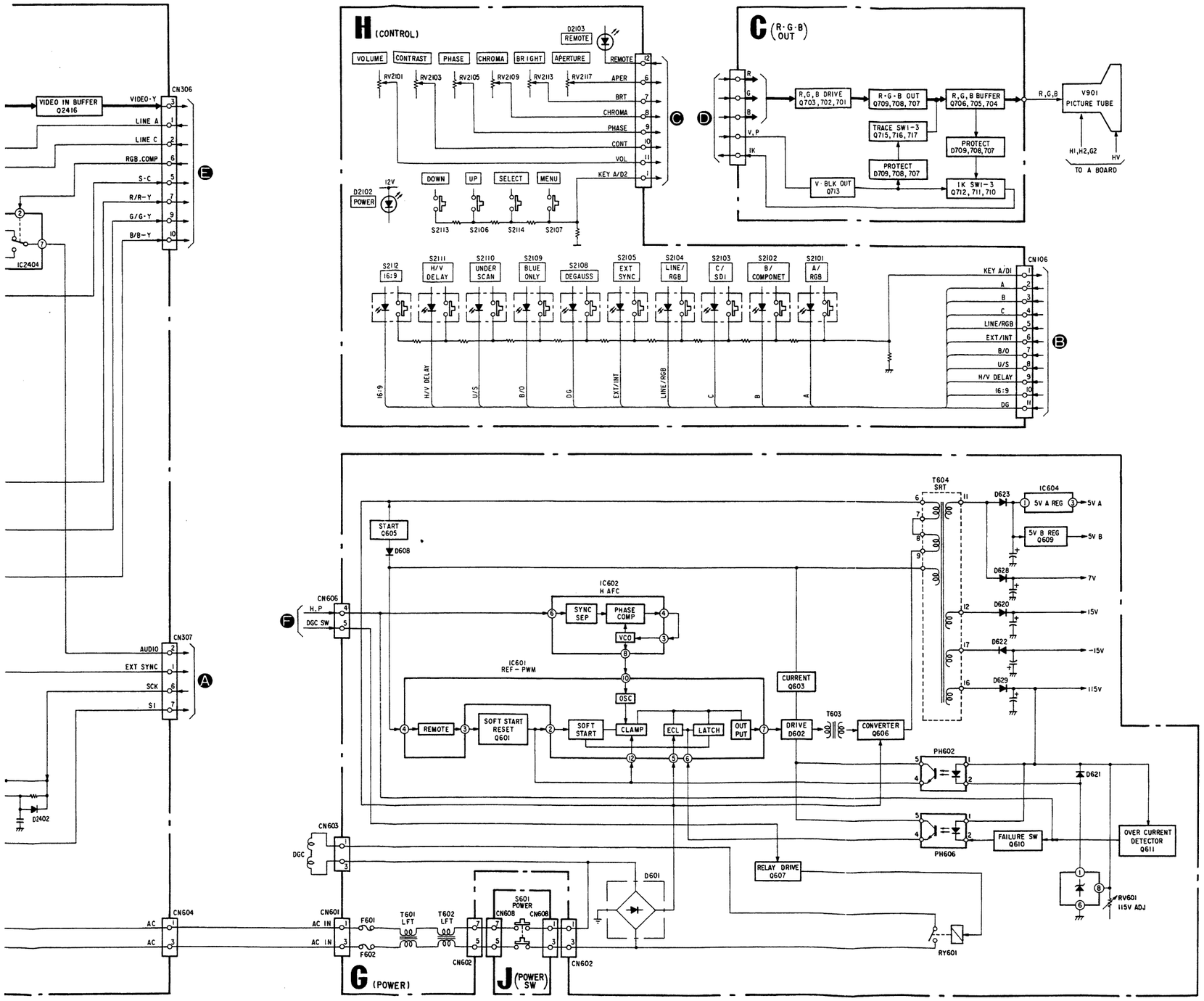
H (CONTROL)
VOLUME
CONTRAST
PHASE
CHROMA
BRIGHT
APERTURE
REMOTE
D2103 REMOTE
RV2101
RV2103
RV2105
RV2109
RV2113
RV2117
APER
BRT
CHROMA
PHASE
CONT
VOL
KEY A/D2
DOWN
UP
SELECT
MENU
D2102 POWER
12V
S2113
S2106
S2114
S2107
C (R·G·B OUT)
R,G,B DRIVE Q703,702,701
R·G·B OUT Q709,708,707
R,G,B BUFFER Q706,705,704
TRACE SW1-3 Q715,716,717
PROTECT D709,708,707
PROTECT D709,708,707
V·BLK OUT Q713
1K SW1-3 Q712,711,710
V901 PICTURE TUBE
H1,H2,G2
HV
TO A BOARD
VIDEO IN BUFFER Q2416
CN306
VIDEO·Y
LINE A
LINE C
RGB.COMP
S·C
R/R-Y
G/G·Y
B/B-Y
IC2404
S2112 16:9
S2111 H/V DELAY
S2110 UNDER SCAN
S2109 BLUE ONLY
S2108 DEGAUSS
S2105 EXT SYNC
S2104 LINE/RGB
S2103 C/SDI
S2102 B/COMPONET
S2101 A/RGB
CN106
KEY A/D1
LINE/RGB
EXT/INT
B/O
U/S
H/V DELAY
16:9
DG
CN307
AUDIO
EXT SYNC
SCK
SI
D2402
CN604
AC
CN606
H.P
DGC SW
CN603
DGC
CN601
AC IN
F601
F602
T601 LFT
T602 LFT
CN602
S601 POWER
CN608
CN609
D601
RELAY DRIVE Q607
RY601
START Q605
D608
IC602 H AFC
SYNC SEP
PHASE COMP
VCO
IC601 REF-PWM
OSC
REMOTE
SOFT START RESET Q601
SOFT START
CLAMP
ECL
LATCH
OUT PUT
DRIVE D602
CURRENT Q603
T603
CONVERTER Q606
T604 SRT
D623
IC604
5V A REG
5V A
5V B REG Q609
5V B
D628
7V
D620
15V
D622
-15V
D629
115V
PH602
PH606
D621
FAILURE SW Q610
OVER CURRENT DETECTOR Q611
RV601 115V ADJ
G (POWER)
J (POWER SW)

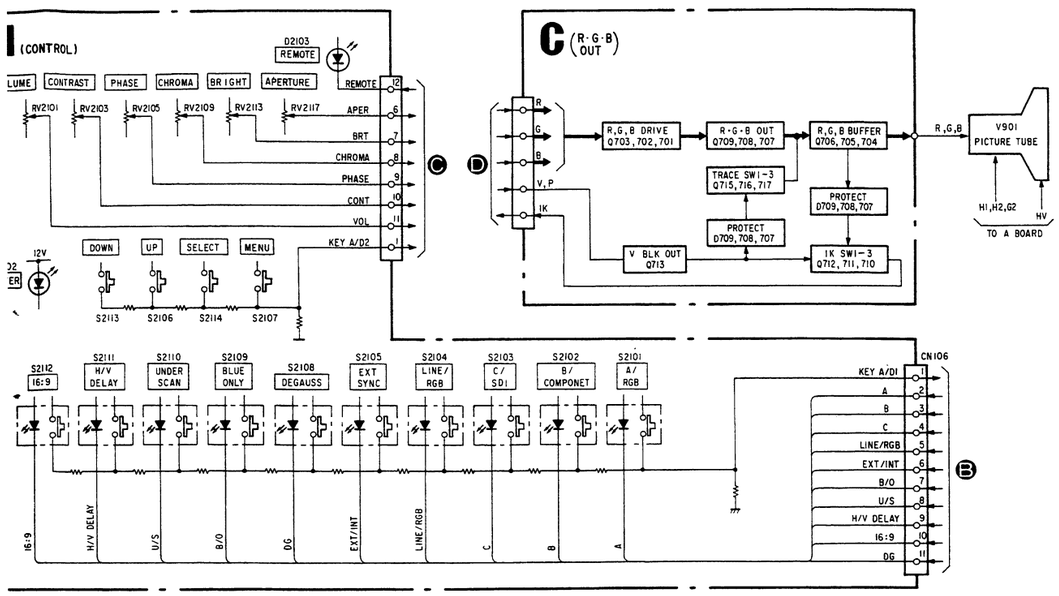
(CONTROL)
D2103
REMOTE
LUME
CONTRAST
PHASE
CHROMA
BRIGHT
APERTURE
RV2101
RV2103
RV2105
RV2109
RV2113
RV2117
APER
BRT
CHROMA
PHASE
CONT
VOL
KEY A/D2
DOWN
UP
SELECT
MENU
12V
S2113
S2106
S2114
S2107
C (R·G·B OUT)
R
G
B
V.P
IK
R,G,B DRIVE Q703,702,701
R·G·B OUT Q709,708,707
R,G,B BUFFER Q706,705,704
TRACE SW1-3 Q715,716,717
PROTECT D709,708,707
PROTECT D709,708,707
V BLK OUT Q713
IK SW1-3 Q712,711,710
R,G,B
V901 PICTURE TUBE
H1,H2,G2
HV
TO A BOARD
S2112 16:9
S2111 H/V DELAY
S2110 UNDER SCAN
S2109 BLUE ONLY
S2108 DEGAUSS
S2105 EXT SYNC
S2104 LINE/RGB
S2103 C/SD1
S2102 B/COMPONET
S2101 A/RGB
CN106
KEY A/D1
A
B
C
LINE/RGB
EXT/INT
B/O
U/S
H/V DELAY
16:9
DG
16:9
H/V DELAY
U/S
B/O
DG
EXT/INT
LINE/RGB
C
B
A

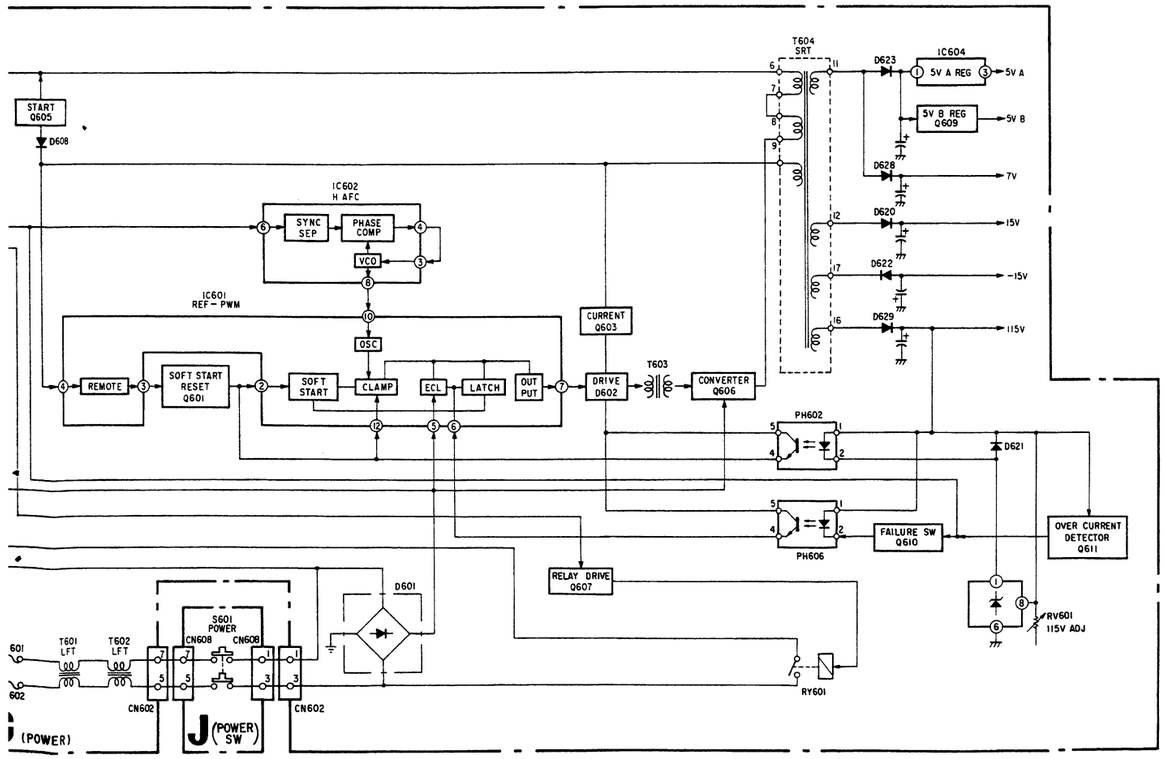
START Q605
D608
T604 SRT
D623
IC604
5V A REG
5V A
5V B REG Q609
5V B
D628
7V
D620
15V
D622
-15V
D629
115V
IC602 H AFC
SYNC SEP
PHASE COMP
VCO
IC601 REF-PWM
OSC
REMOTE
SOFT START RESET Q601
SOFT START
CLAMP
ECL
LATCH
OUT PUT
DRIVE D602
CURRENT Q603
T603
CONVERTER Q606
PH602
D621
PH606
FAILURE SW Q610
OVER CURRENT DETECTOR Q611
RELAY DRIVE Q607
D601
RV601 115V ADJ
RY601
T601 LFT
T602 LFT
S601 POWER
CN608
CN608
CN602
CN602
(POWER)
J (POWER) SW

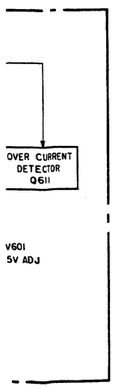
OVER CURRENT
DETECTOR
Q611
V601
5V ADJ

6-2. FRAME SCHEMATIC DIAGRAM

(PVM-1351Q/1354Q only)

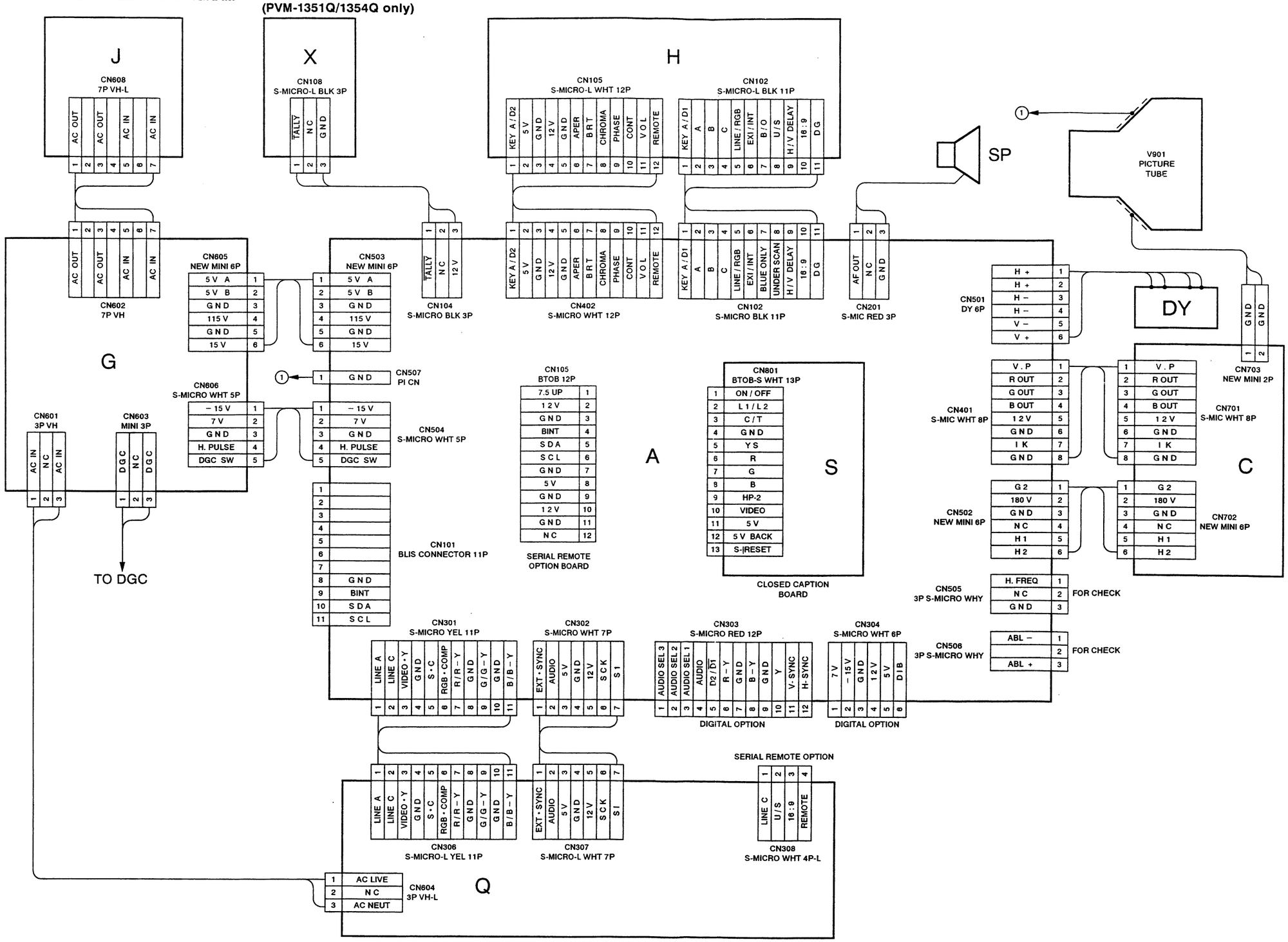

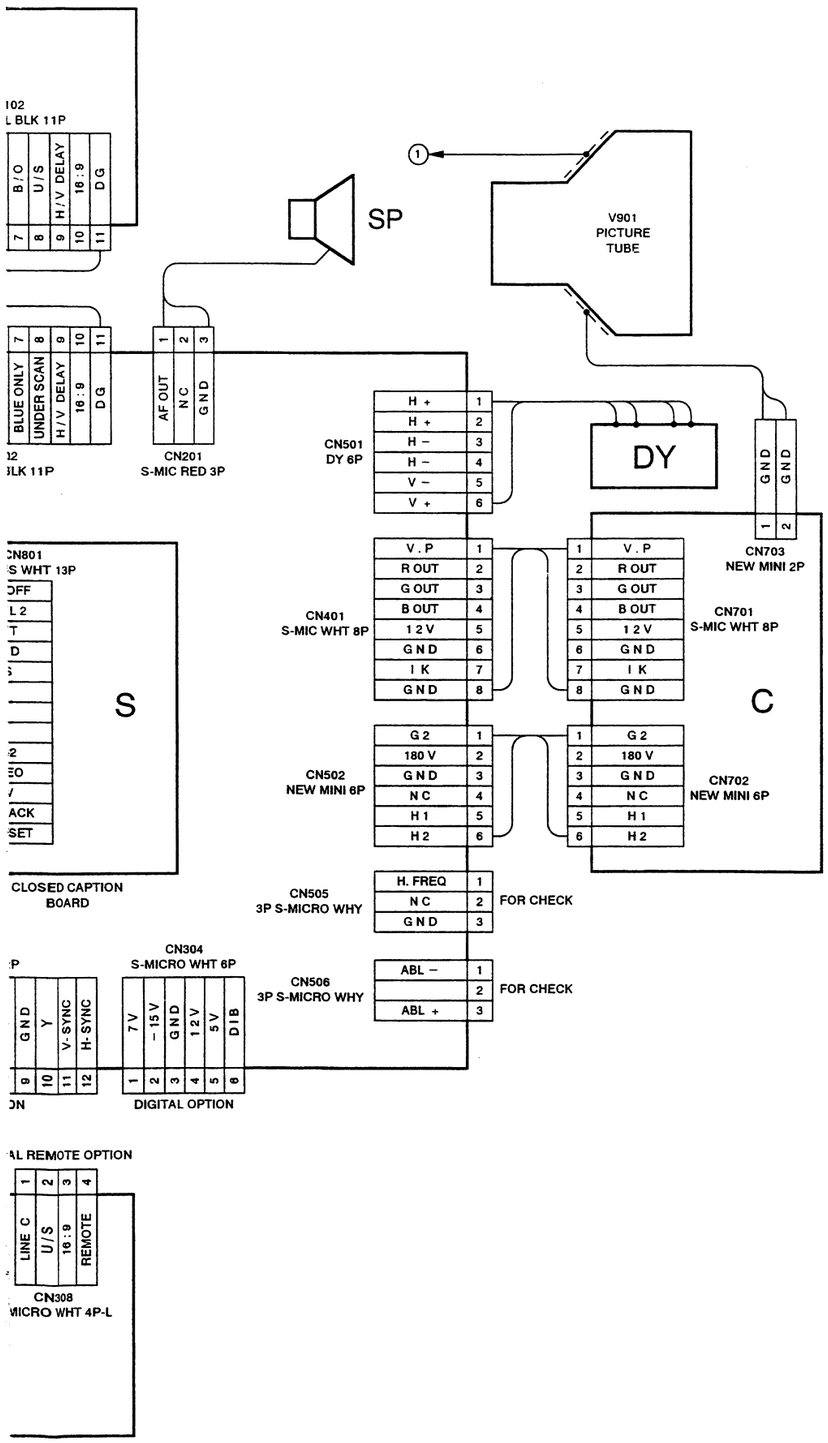

6-3. CIRCUIT BOARDS LOCATION

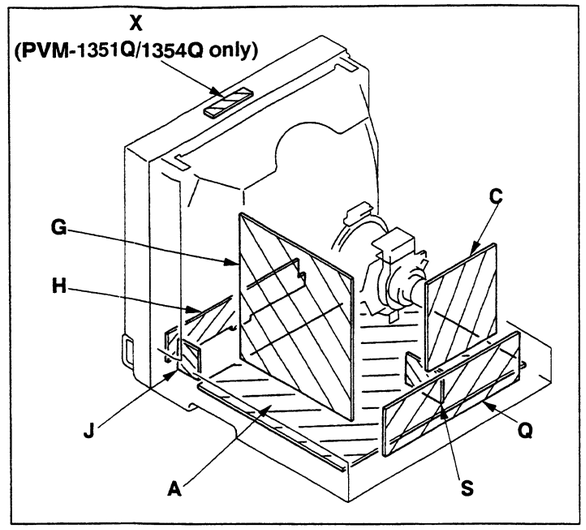

- All voltages are in V.
- Voltage are dc with respect to ground unless otherwise noted.
- Readings are taken with a color-bar signal input.
- Voltage variations may be noted due to normal production tolerances.
- ▬▬▬ : B + bus.
- ▬ ▬ ▬ : B − bus.
- ▒▒▒ : signal path.
- No mark : with PAL colour-bar signal sreceived or common voltage.
- For the respective voltage ratings in SECAM, NTSC 3.58, NTSC 4.43, S-VIDEO, and ANALOG RGB modes, see the table

Reference information

RESISTOR	: RN	METAL FILM
	: RC	SOLID
	: FPRD	NONFLAMMABLE CARBON
	: FUSE	NONFLAMMABLE FUSIBLE
	: RW	NONFLAMMABLE WIREWOUND
	: RS	NONFLAMMABLE METAL OXIDE
	: RB	NONFLAMMABLE CEMENT
COIL	: LF-8L	MICRO INDUCTOR
CAPACITOR	: TA	TANTALUM
	: PS	STYROL
	: PP	POLYPROPYLENE
	: PT	MYLAR
	: MPS	METALIZED POLYESTER
	: MPP	METALIZED POLYPROPYLENE
	: ALB	BIPOLAR
	: ALT	HIGH TEMPERATURE
	: ALR	HIGH RIPPLE

Note: The components identified by shading and mark ⚠ are critical for safety. Replace only with part number specified.

Note: Les composants identifiés par une trame et par une marque ⚠ sont d'une importance critique pour la sécurité. Ne les remplacer que par des pièces de numéro spécifié.

6-4. PRINTED WIRING BOARDS AND SCHEMATIC DIAGRAMS

Note:

- All capacitors are in μF unless otherwise noted. pF: μμF 50 WV or less are not indicated except for electrolytics.
- Indication of resistance, which does not have one for rating electrical power, is as follows.

  Pitch: 5 mm
  Rating electrical power ¼ W

- All resistors are in ohms.
- ▭ : nonflammable resistor.
- ▭ : fusible resistor.
- △ : internal component.
- ▭ : panel designation, and adjustment for repair.
- All variable and adjustable resistors have characteristic curve B, unless otherwise noted.
- The components identified by ⊠ in this basic schematic diagram have been carefully factory-selected for each set in order to satisfy regulations regarding X-ray radiation. Should replacement be required, replace only with the value originally used.
- When replacing components identified by ◪, make the necessary adjustments indicated. If results do not meet the specified value, change the component identified by ⊠ and repeat the adjustment until the specified value is achieved. (Refer to R690 adjust on Page 29 and 30.)
- When replacing the part in below table, be sure to perform the related adjustment.

Part replaced (◪)	Adjustment (⊠)
C506, C512, C513, C523, C549, C592, D501, D533, IC500, IC507, Q500, Q511, R506, R508, R515, R516, R517, R518, R519, R551, R1535, R1536, R1537, R1560, T501 ····· (A BOARD) C603, IC602 ····· (G BOARD)	R1535, R1536 (HOLD-DOWN)

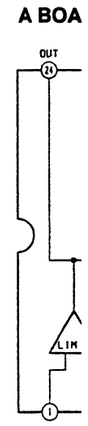

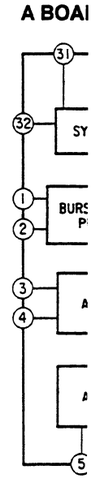

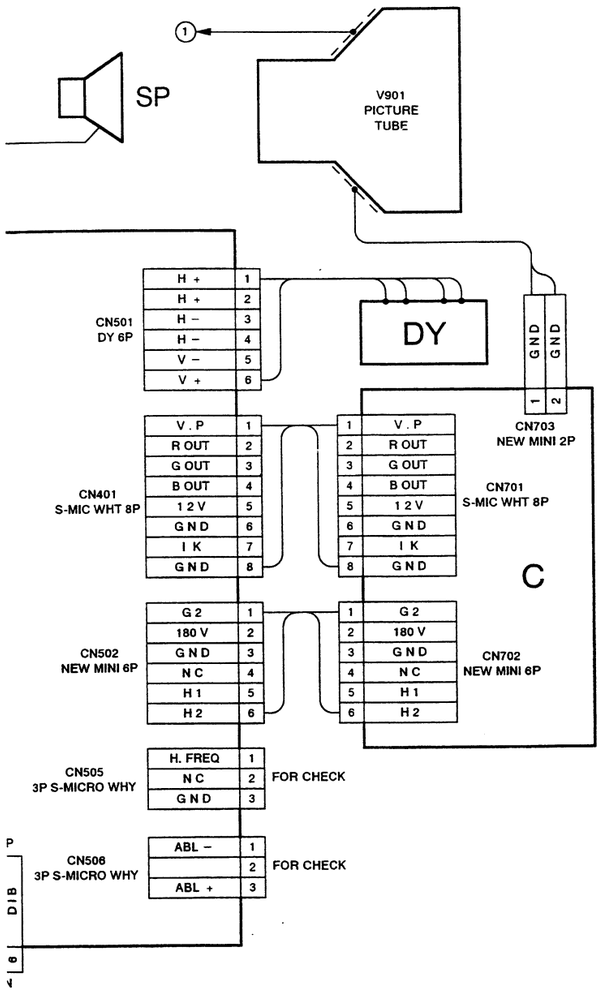

6-3. CIRCUIT BOARDS LOCATION

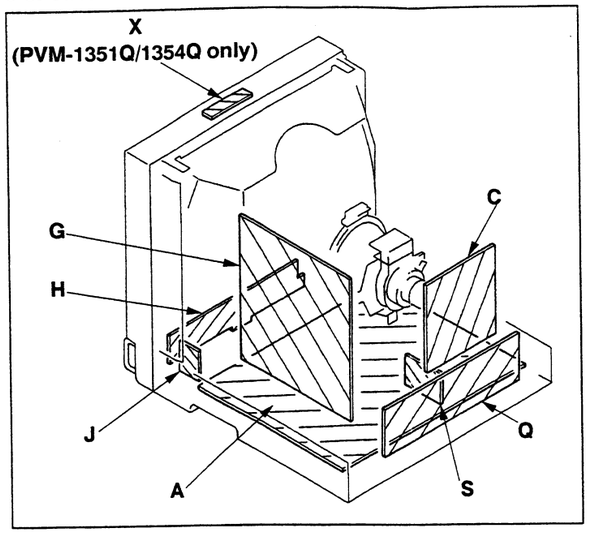

6-4. PRINTED WIRING BOARDS AND SCHEMATIC DIAGRAMS

Note:

- All capacitors are in μF unless otherwise noted. pF: μμF 50 WV or less are not indicated except for electrolytics.
- Indication of resistance, which does not have one for rating electrical power, is as follows.

Pitch: 5 mm Rating electrical power ¼ W

- All resistors are in ohms.
- : nonflammable resistor.
- : fusible resistor.
- △ : internal component.
- ▭ : panel designation, and adjustment for repair.
- All variable and adjustable resistors have characteristic curve B, unless otherwise noted.
- The components identified by ⊠ in this basic schematic diagram have been carefully factory-selected for each set in order to satisfy regulations regarding X-ray radiation. Should replacement be required, replace only with the value originally used.
- When replacing components identified by ◪, make the necessary adjustments indicated. If results do not meet the specified value, change the component identified by ⊠ and repeat the adjustment until the specified value is achieved. (Refer to R690 adjust on Page 29 and 30.)
- When replacing the part in below table, be sure to perform the related adjustment.

Part replaced (◪)	Adjustment (⊠)
C506, C512, C513, C523, C549, C592, D501, D533, IC500, IC507, Q500, Q511,R506, R508, R515, R516, R517, R518,R519, R551, R1535, R1536, R1537, R1560, T501 ····· (A BOARD) C603, IC602·····(G BOARD)	R1535, R1536 (HOLD-DOWN)

- All voltages are in V.
- Voltage are dc with respect to ground unless otherwise noted.
- Readings are taken with a color-bar signal input.
- Voltage variations may be noted due to normal production tolerances.
- ▬▬ : B + bus.
- ▬ ▬ ▬ : B − bus.
- ▒▒▒ : signal path.
- **No mark** : with PAL colour-bar signal sreceived or common voltage.
- For the respective voltage ratings in SECAM, NTSC 3.58, NTSC 4.43, S-VIDEO, and ANALOG RGB modes, see the table

Reference information

RESISTOR	: RN	METAL FILM
	: RC	SOLID
	: FPRD	NONFLAMMABLE CARBON
	: FUSE	NONFLAMMABLE FUSIBLE
	: RW	NONFLAMMABLE WIREWOUND
	: RS	NONFLAMMABLE METAL OXIDE
	: RB	NONFLAMMABLE CEMENT
COIL	: LF-8L	MICRO INDUCTOR
CAPACITOR	: TA	TANTALUM
	: PS	STYROL
	: PP	POLYPROPYLENE
	: PT	MYLAR
	: MPS	METALIZED POLYESTER
	: MPP	METALIZED POLYPROPYLENE
	: ALB	BIPOLAR
	: ALT	HIGH TEMPERATURE
	: ALR	HIGH RIPPLE

Note: The components identified by shading and mark ⚠ are critical for safety. Replace only with part number specified.

Note: Les composants identifiés par une trame et par une marque ⚠ sont d'une importance critique pour la sécurité. Ne les remplacer que par des pièces de numéro spécifié.

A BOARD IC303 CXA1214F

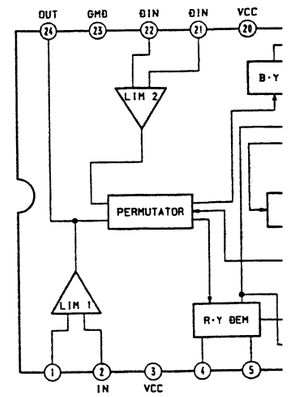

A BOARD IC305 M51279FP

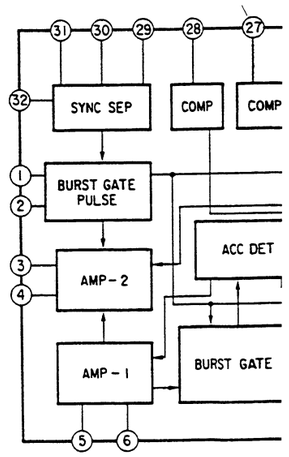

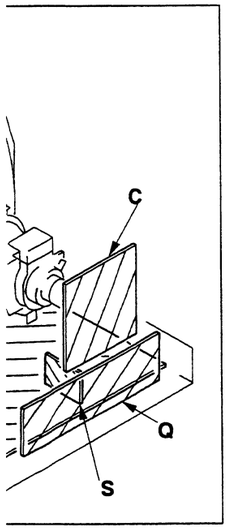

) SCHEMATIC DIAGRAMS

ed. pF: μμF
ylytics.
one for rating

repair.
:cteristic curve

sic schematic
:r each set in
:ion.
with the value

⚠ , make the
not meet the
ed by ⊠ and
: is achieved.

to perform the

ment (⊠)

5, R1536
D-DOWN)

- All voltages are in V.
- Voltage are dc with respect to ground unless otherwise noted.
- Readings are taken with a color-bar signal input.
- Voltage variations may be noted due to normal production tolerances.
- ▬▬ : B + bus.
- ▬ ▬ ▬ : B − bus.
- ▒▒▒▒ : signal path.
- **No mark** : with PAL colour-bar signal sreceived or common voltage.
- For the respective voltage ratings in SECAM, NTSC 3.58, NTSC 4.43, S-VIDEO, and ANALOG RGB modes, see the table

Reference information

RESISTOR	: RN	METAL FILM
	: RC	SOLID
	: FPRD	NONFLAMMABLE CARBON
	: FUSE	NONFLAMMABLE FUSIBLE
	: RW	NONFLAMMABLE WIREWOUND
	: RS	NONFLAMMABLE METAL OXIDE
	: RB	NONFLAMMABLE CEMENT
COIL	: LF-8L	MICRO INDUCTOR
CAPACITOR	: TA	TANTALUM
	: PS	STYROL
	: PP	POLYPROPYLENE
	: PT	MYLAR
	: MPS	METALIZED POLYESTER
	: MPP	METALIZED POLYPROPYLENE
	: ALB	BIPOLAR
	: ALT	HIGH TEMPERATURE
	: ALR	HIGH RIPPLE

Note: The components identified by shading and mark ⚠ are critical for safety. Replace only with part number specified.

Note: Les composants identifiés par une trame et par une marque ⚠ sont d'une importance critique pour la sécurité. Ne les remplacer que par des pièces de numéro spécifié.

A BOARD IC303 CXA1214P

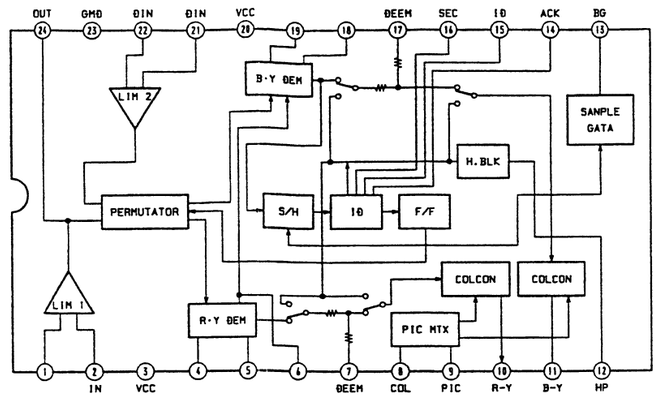

A BOARD IC305 M51279FP

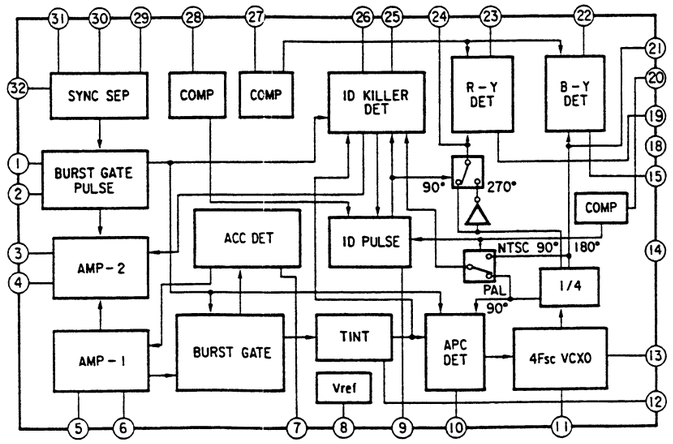

PVM-1350/1351Q/1354Q PVM-1350/1351Q/1354Q

A [MICON, RGB-MATRIX, DAC, ON SCREEN DISPLAY, ON/OFF MUTE, VOL OFF SW, BLACK-SAMPLING, RGB SW] [CHROMA DEMOD, SECAM CHROMA SELECT, SYSTEM SW, SYNC SELECT, B/B-Y SW, R/R-Y SW, G/Y SW, AUDIO SELECT, SECAM DECORDER, HOLD AMP] [H/V OUT, DEFLECTION SYSTEM, SUDIO OUT]

Note :
- : Pattern from the side wh
- : Pattern of the rear side.

– A BOARD – 〈Component Side〉

COMPONENT SIDE

IC

IC101	B – 2
IC102	B – 1
IC103	C – 1
IC104	B – 1
IC105	B – 3
IC106	C – 3
IC107	C – 2
IC109	C – 3
IC110	C – 3
IC111	B – 2
IC200	A – 5
IC301	G – 2
IC302	G – 2
IC303	E – 1
IC304	G – 1
IC305	G – 2
IC306	F – 3
IC309	F – 3
IC310	D – 3
IC311	E – 3
IC312	E – 3
IC313	F – 2
IC314	G – 4
IC315	D – 2
IC316	G – 5
IC317	D – 1
IC318	D – 2
IC320	F – 5
IC321	F – 5
IC322	E – 5
IC323	E – 5
IC324	E – 4
IC325	E – 4
IC326	E – 2
IC350	D – 2
IC401	B – 4
IC402	D – 4
IC403	B – 5
IC404	D – 4
IC405	C – 5
IC406	B – 5
IC407	C – 5
IC408	C – 6
IC409	C – 6
IC410	B – 4
IC411	B – 5
IC412	B – 4
IC413	C – 4
IC502	G – 6
IC503	G – 6
IC504	C – 7
IC505	E – 6
IC506	E – 6
IC507	D – 7
IC508	C – 7
IC509	C – 7
IC510	E – 2

TRANSISTOR

Q102	C – 2
Q103	C – 2
Q104	B – 2
Q105	A – 3
Q107	A – 3
Q108	C – 2
Q109	B – 3
Q110	A – 1
Q112	D – 5
Q200	A – 6
Q300	G – 2
Q308	G – 3
Q311	G – 3
Q314	F – 4
Q316	F – 5
Q324	G – 1
Q335	D – 1
Q341	E – 3
Q342	E – 3
Q343	E – 4
Q346	F – 1
Q347	E – 2
Q348	E – 2
Q353	D – 3
Q354	E – 3
Q355	F – 5
Q356	D – 2
Q357	G – 2
Q358	G – 1
Q359	G – 1
Q360	D – 2
Q362	D – 3
Q365	E – 3
Q366	E – 3
Q372	C – 3
Q373	D – 3
Q374	C – 3
Q404	B – 5
Q406	B – 5
Q408	B – 5
Q410	D – 4
Q411	B – 5
Q412	C – 5
Q413	C – 5
Q414	D – 5
Q415	D – 5
Q416	D – 5
Q425	D – 5
Q426	D – 5
Q429	C – 5
Q430	D – 5
Q432	C – 5
Q433	C – 4
Q435	D – 4
Q436	D – 4
Q437	D – 4
Q438	C – 5
Q440	C – 4
Q441	C – 4
Q442	C – 4
Q445	C – 5
Q501	D – 9
Q502	D – 8
Q503	B – 7
Q512	A – 10
Q513	A – 9
Q515	B – 8
Q518	B – 7
Q520	B – 7
Q523	B – 6
Q524	A – 6
Q525	A – 6
Q527	B – 8

DIODE

D104	B – 1
D105	B – 1
D109	A – 1
D110	E – 5
D112	A – 1
D113	B – 4
D114	F – 2
D300	G – 2
D301	D – 2
D305	G – 3
D313	G – 5
D314	C – 1
D318	E – 4
D319	E – 5
D327	D – 3
D332	E – 3
D335	F – 1
D336	F – 1
D338	E – 3
D339	E – 2
D341	C – 3
D348	E – 5
D349	E – 5
D350	E – 4
D351	B – 3
D352	E – 4
D360	C – 3
D361	C – 3
D362	E – 2
D365	G – 4
D380	D – 2
D381	D – 2
D406	C – 1
D413	E – 5
D414	D – 4
D415	E – 5
D416	D – 4
D417	D – 4
D418	D – 3
D423	C – 6
D424	B – 5
D502	E – 9
D504	D – 8
D505	E – 10
D506	D – 9
D510	F – 6
D512	D – 9
D514	E – 7
D515	F – 10
D520	E – 6
D522	D – 6
D524	C – 8
D525	C – 9
D527	B – 8
D528	A – 10
D529	A – 8
D530	A – 10
D533	G – 10
D535	B – 6
D537	A – 7
D538	D – 6
D539	B – 7
D540	E – 6
D541	F – 3

NOTE:
The circuit indicated as left contains high voltage of over 600 Vp-p. Care must be paid to prevent an electric shock in inspection or repairing.

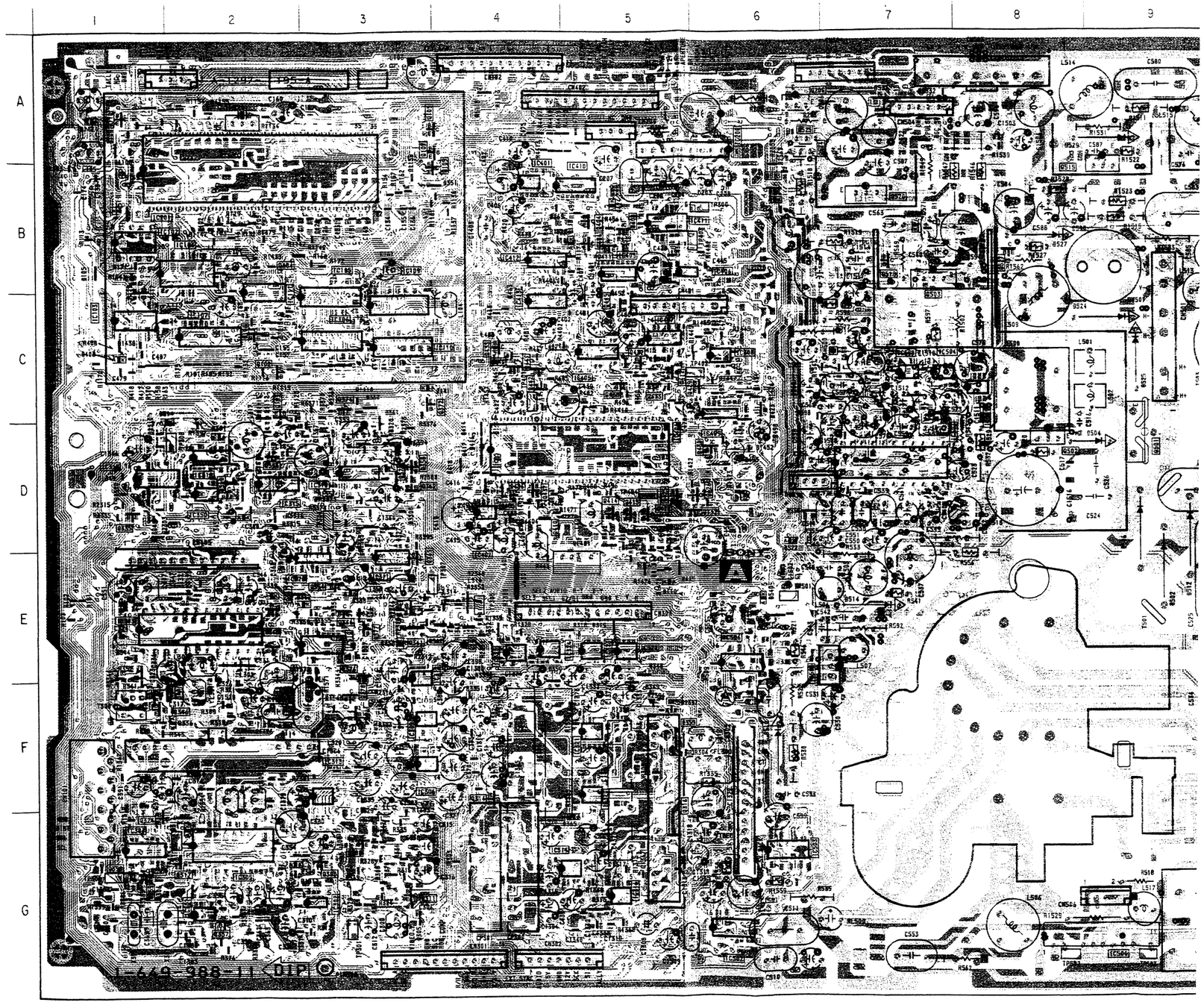

J SYSTEM,]

Note :

- : Pattern from the side which enables seeing.
- : Pattern of the rear side.

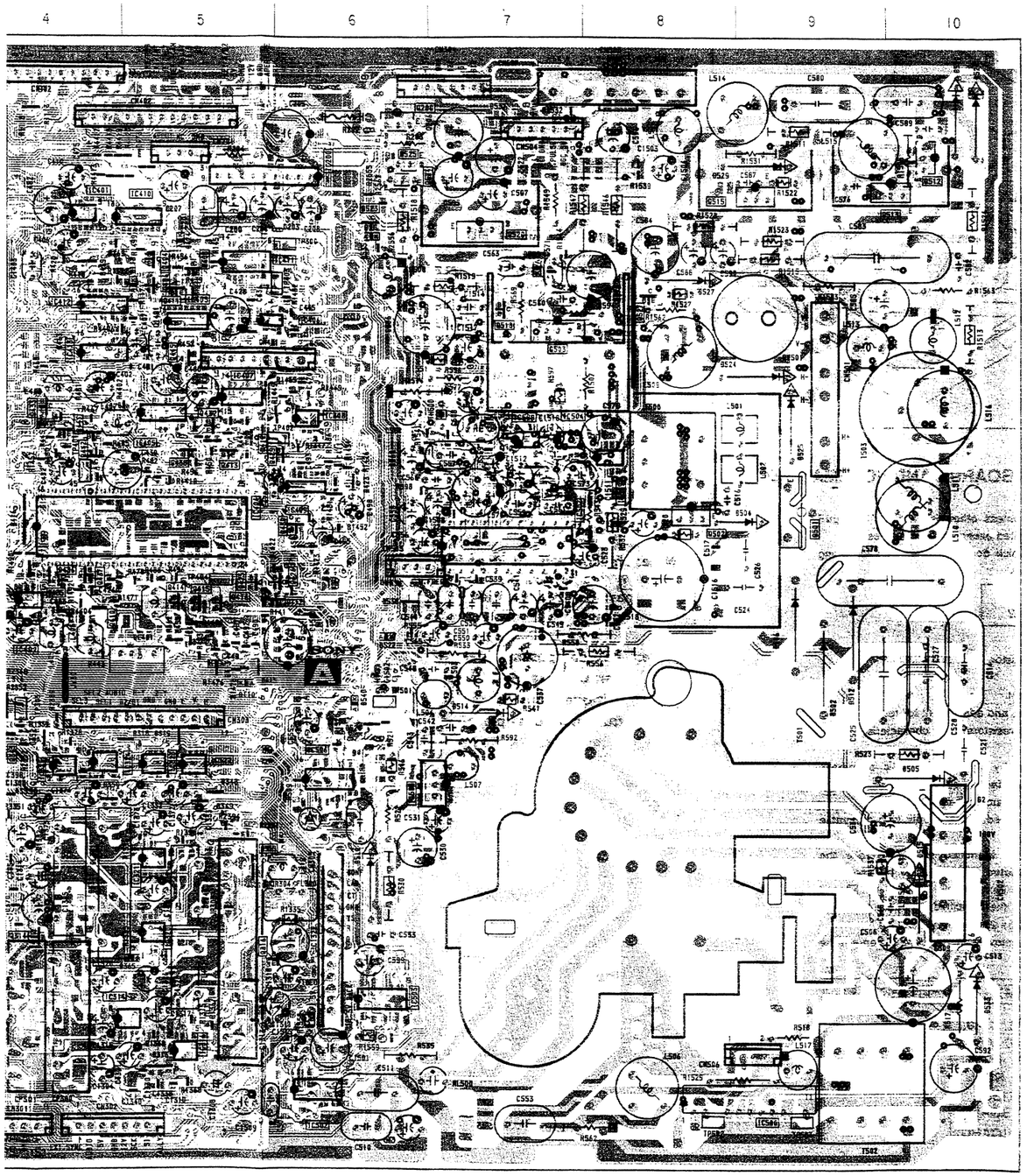

CONDUCTOR SIDE

IC	
IC101	A - 9
IC102	B - 10
IC108	B - 8
IC200	A - 5
IC303	E - 9
IC404	D - 6
IC505	E - 4
IC507	D - 4

TRANSISTOR	
Q101	A - 9
Q111	C - 10
Q113	A - 7
Q201	A - 6
Q301	G - 8
Q302	G - 10
Q303	G - 6
Q304	G - 6
Q305	G - 8
Q306	G - 7
Q307	G - 8
Q309	G - 8
Q310	G - 7
Q312	G - 8
Q313	G - 8
Q315	G - 8
Q318	G - 8
Q319	F - 7
Q321	G - 8
Q323	G - 10
Q325	F - 8
Q326	F - 6
Q327	F - 6
Q328	G - 9
Q329	G - 9
Q330	F - 9
Q331	F - 9
Q332	G - 10
Q333	D - 9
Q334	F - 9
Q336	E - 10
Q337	E - 10
Q338	C - 9
Q339	D - 8
Q345	D - 8
Q349	E - 9
Q350	D - 8
Q351	D - 8
Q352	D - 8
Q361	F - 8
Q363	G - 9
Q364	D - 8
Q367	E - 8
Q368	E - 8
Q369	E - 8
Q375	D - 8
Q401	B - 6
Q402	B - 6
Q403	B - 6
Q405	C - 6
Q407	C - 7
Q409	D - 7
Q417	C - 6
Q418	B - 5
Q419	C - 6
Q420	C - 6
Q421	B - 5
Q422	B - 5
Q423	C - 5
Q424	C - 5
Q428	D - 6
Q431	B - 5
Q434	C - 5
Q439	C - 6
Q443	C - 5
Q444	B - 5
Q500	F - 2
Q501	D - 2
Q502	D - 3
Q503	B - 3
Q505	E - 5
Q506	B - 4
Q507	E - 5
Q508	C - 4
Q509	G - 5
Q511	F - 2
Q512	A - 1
Q513	A - 1
Q514	B - 4
Q515	B - 2
Q517	C - 4
Q519	C - 4
Q520	B - 4
Q522	E - 5
Q524	A - 5
Q525	A - 4
Q526	A - 3

DIODE	
D101	B - 10
D102	B - 9
D103	B - 9
D107	B - 9
D200	A - 4
D301	G - 8
D302	F - 9
D303	F - 7
D304	G - 7
D307	G - 8
D309	G - 8
D310	G - 8
D311	G - 9
D315	E - 8
D317	D - 9
D320	D - 9
D322	D - 9
D323	C - 9
D324	E - 9
D325	D - 8
D326	E - 9
D333	D - 8
D337	E - 8
D344	D - 8
D345	E - 7
D346	E - 7
D347	E - 7
D353	D - 8
D354	B - 7
D355	C - 7
D363	E - 8
D364	E - 8
D401	B - 7
D404	D - 6
D405	B - 5
D407	D - 7
D408	B - 5
D410	C - 5
D411	B - 6
D421	C - 5
D422	C - 5
D425	C - 5
D426	C - 6
D427	B - 6
D500	G - 5
D501	G - 2
D502	E - 2
D503	C - 2
D504	D - 2
D505	E - 1
D506	D - 2
D507	G - 5
D508	G - 5
D509	G - 5
D510	F - 5
D512	D - 2
D513	E - 5
D514	E - 4
D515	F - 1
D516	F - 5
D517	D - 4
D518	E - 5
D519	C - 4
D522	A - 4
D523	A - 2
D524	C - 2
D525	C - 2
D526	B - 4
D527	B - 3
D528	A - 1
D529	A - 2
D530	A - 1
D531	A - 4
D532	A - 4
D533	G - 1
D534	B - 4
D536	A - 5

VARIABLE RESISTOR	
RV501	B - 2

– A BOARD – 〈Conductor Side〉

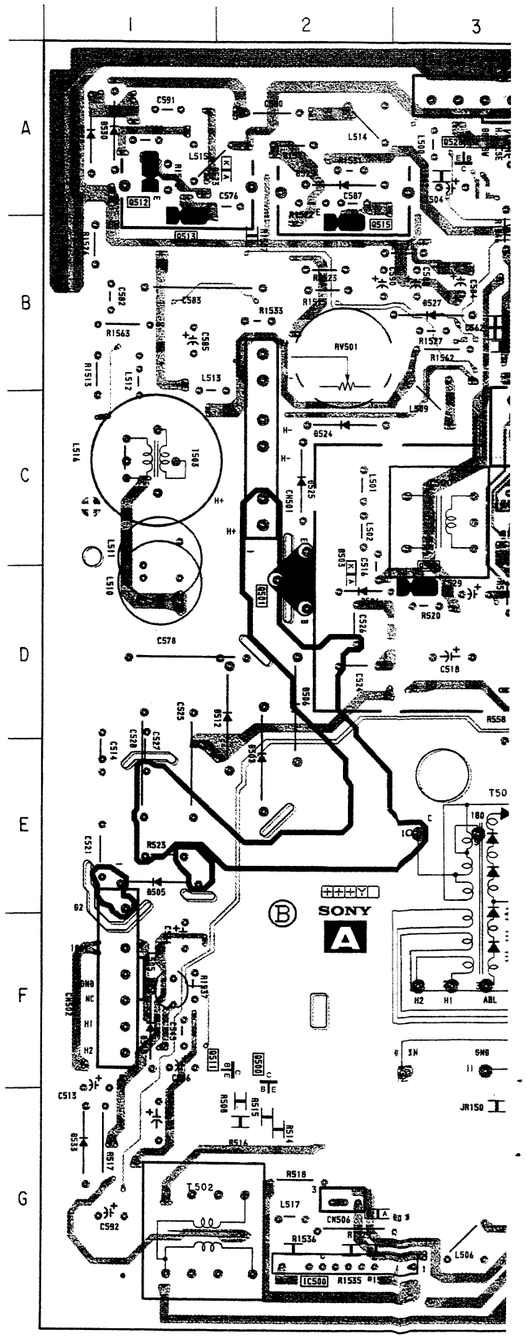

Note :

- : Pattern from the side which enables seeing.
- : Pattern of the rear side.

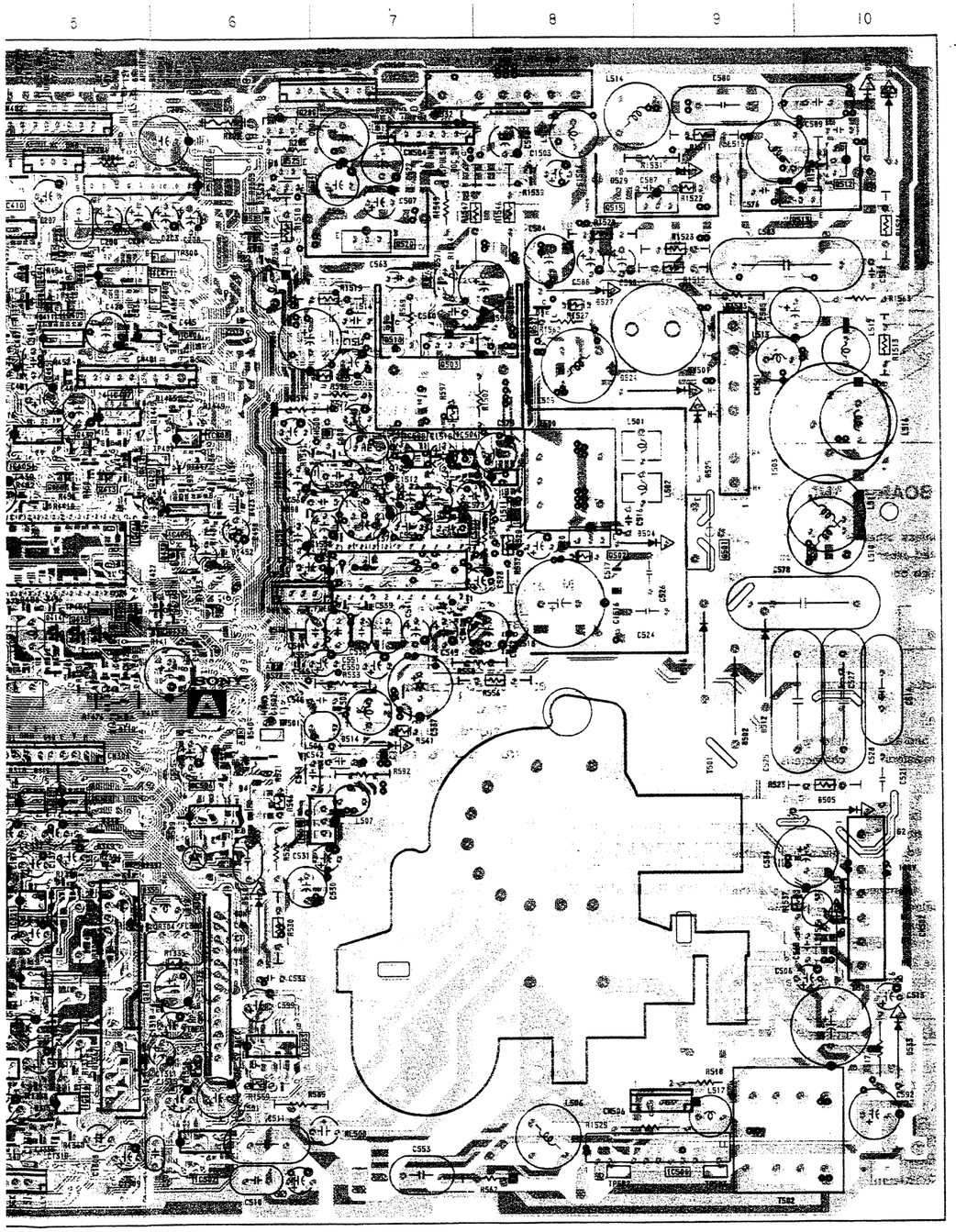

CONDUCTOR SIDE

IC	
IC101	A - 9
IC102	B - 10
IC108	B - 8
IC200	A - 5
IC303	E - 9
IC404	D - 6
IC505	E - 4
IC507	D - 4

TRANSISTOR	
Q101	A - 9
Q111	C - 10
Q113	A - 7
Q201	A - 6
Q301	G - 8
Q302	G - 10
Q303	G - 6
Q304	G - 6
Q305	G - 8
Q306	G - 7
Q307	G - 8
Q309	G - 8
Q310	G - 7
Q312	G - 8
Q313	G - 8
Q315	G - 8
Q318	G - 8
Q319	F - 7
Q321	G - 8
Q323	G - 10
Q325	F - 8
Q326	F - 6
Q327	F - 6
Q328	G - 9
Q329	G - 9
Q330	F - 9
Q331	F - 9
Q332	G - 10
Q333	D - 9
Q334	F - 9
Q336	E - 10
Q337	E - 10
Q338	C - 9
Q339	D - 8
Q345	D - 8
Q349	E - 9
Q350	D - 8
Q351	D - 8
Q352	D - 8
Q361	F - 8
Q363	G - 9
Q364	D - 8
Q367	E - 8
Q368	E - 8
Q369	E - 8
Q375	D - 8
Q401	B - 6
Q402	B - 6
Q403	B - 6
Q405	C - 6
Q407	C - 7
Q409	D - 7
Q417	C - 6
Q418	B - 5
Q419	C - 6
Q420	C - 6
Q421	B - 5
Q422	B - 5
Q423	C - 5
Q424	C - 5
Q428	D - 6
Q431	B - 5
Q434	C - 5
Q439	C - 6
Q443	C - 5
Q444	B - 5
Q500	F - 2
Q501	D - 2
Q502	D - 3
Q503	B - 3
Q505	E - 5
Q506	B - 4
Q507	E - 5
Q508	C - 4
Q509	G - 5
Q511	F - 2
Q512	A - 1
Q513	A - 1
Q514	B - 4
Q515	B - 2
Q517	C - 4
Q519	C - 4
Q520	B - 4
Q522	E - 5
Q524	A - 5
Q525	A - 4
Q526	A - 3

DIODE	
D101	B - 10
D102	B - 9
D103	B - 9
D107	B - 9
D200	A - 4
D301	G - 8
D302	F - 9
D303	F - 7
D304	G - 7
D307	G - 8
D309	G - 8
D310	G - 8
D311	G - 9
D315	E - 8
D317	D - 9
D320	D - 9
D322	D - 9
D323	C - 9
D324	E - 9
D325	D - 8
D326	E - 9
D333	D - 8
D337	E - 8
D344	D - 8
D345	E - 7
D346	E - 7
D347	E - 7
D353	D - 8
D354	B - 7
D355	C - 7
D363	E - 8
D364	E - 8
D401	B - 7
D404	D - 6
D405	B - 5
D407	D - 7
D408	B - 5
D410	C - 5
D411	B - 6
D421	C - 5
D422	C - 5
D425	C - 5
D426	C - 6
D427	B - 6
D500	G - 5
D501	G - 2
D502	E - 2
D503	C - 2
D504	D - 2
D505	E - 1
D506	D - 2
D507	G - 5
D508	G - 5
D509	G - 5
D510	F - 5
D512	D - 2
D513	E - 5
D514	E - 4
D515	F - 1
D516	F - 5
D517	D - 4
D518	E - 5
D519	C - 4
D522	A - 4
D523	A - 2
D524	C - 2
D525	C - 2
D526	B - 4
D527	B - 3
D528	A - 1
D529	A - 2
D530	A - 1
D531	A - 4
D532	A - 4
D533	G - 1
D534	B - 4
D536	A - 5

VARIABLE RESISTOR	
RV501	B - 2

– A BOARD – 〈Conductor Side〉

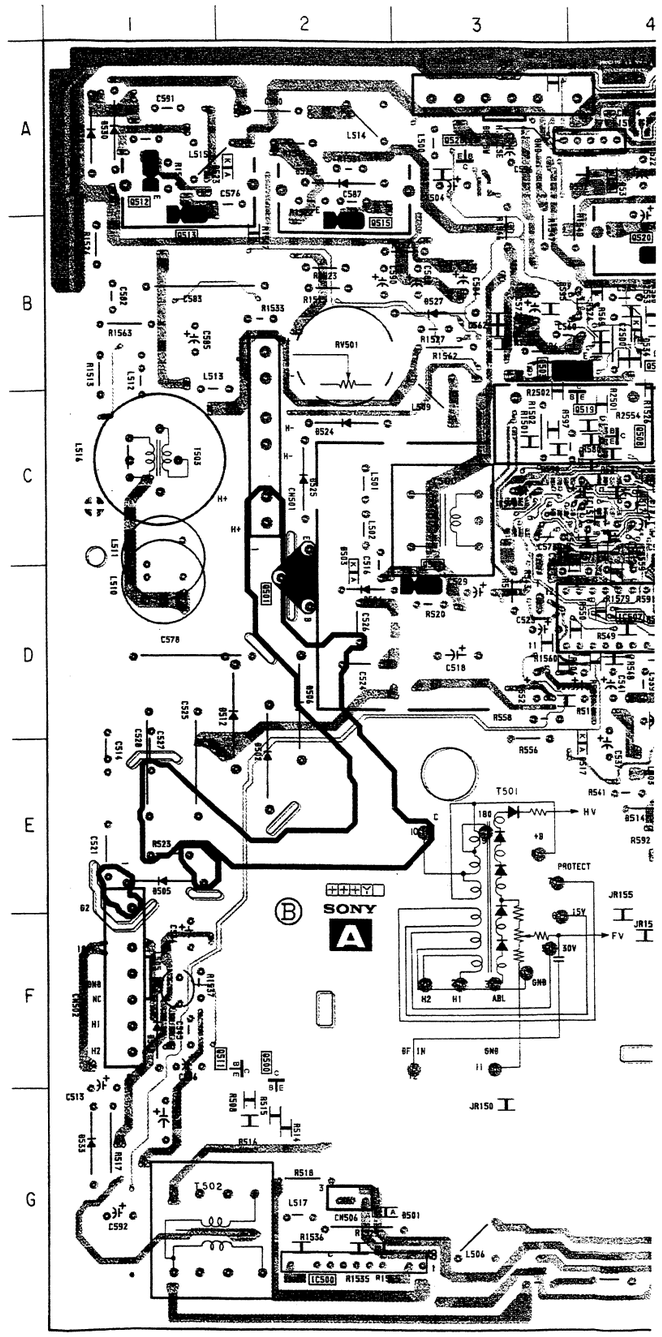

Note :

- : Pattern from the side which enables seeing.
- : Pattern of the rear side.

– A BOARD – 〈Conductor Side〉

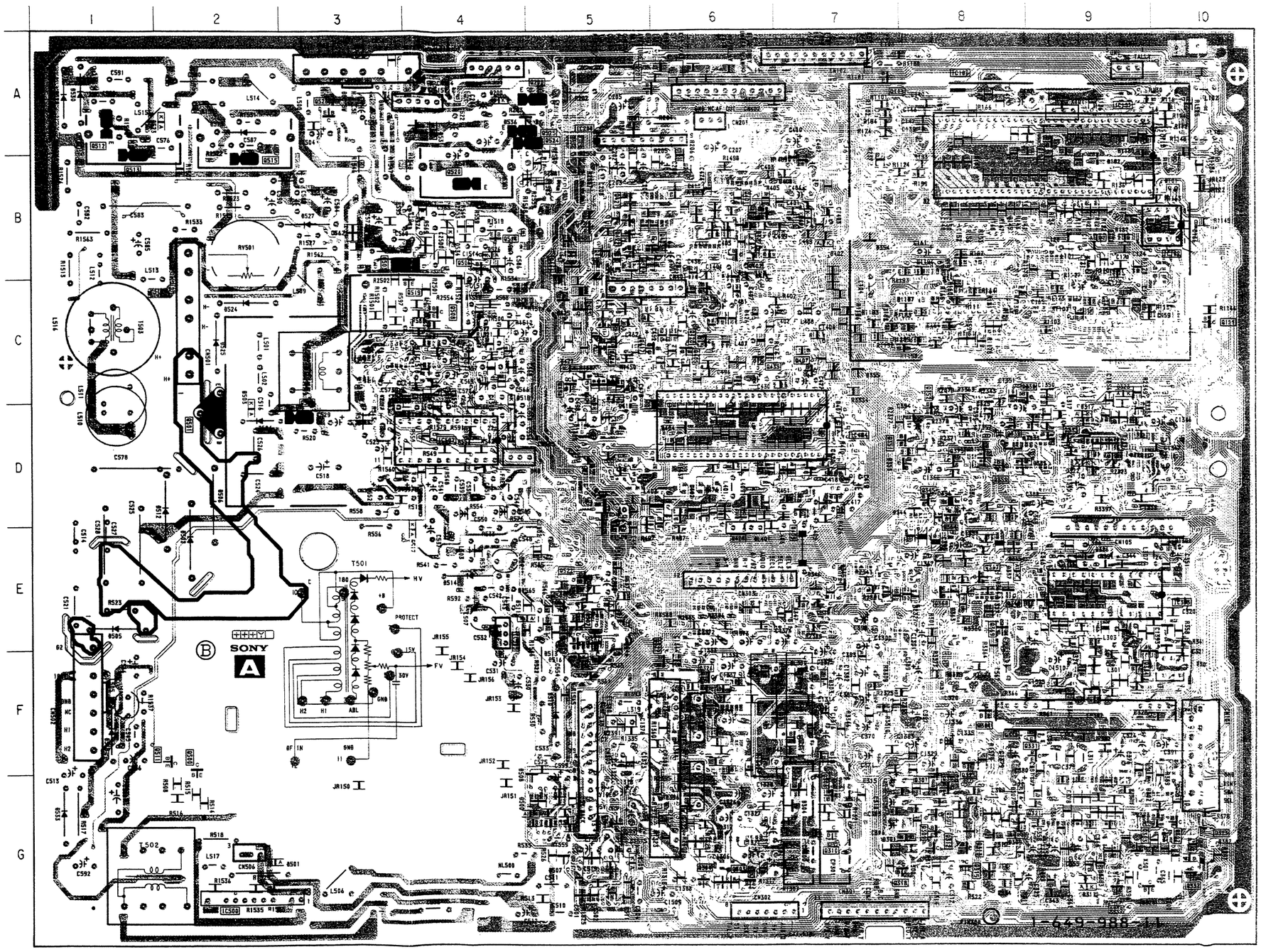

UCTOR SIDE

IC	
	A - 9
2	B - 10
3	B - 8
0	A - 5
3	E - 9
4	D - 6
5	E - 4
7	D - 4

ANSISTOR	
	A - 9
	C - 10
3	A - 7
	A - 6
	G - 8
2	G - 10
3	G - 6
4	G - 6
5	G - 8
6	G - 7
7	G - 8
9	G - 8
0	G - 7
2	G - 8
3	G - 8
5	G - 8
3	G - 8
9	F - 7
1	G - 8
3	G - 10
5	F - 8
5	F - 6
7	F - 6
8	G - 9
9	G - 9
0	F - 9
1	F - 9
2	G - 10
3	D - 9
4	F - 9
6	E - 10
7	E - 10
8	C - 9
9	D - 8

Q345	D - 8
Q349	E - 9
Q350	D - 8
Q351	D - 8
Q352	D - 8
Q361	F - 8
Q363	G - 9
Q364	D - 8
Q367	E - 8
Q368	E - 8
Q369	E - 8
Q375	D - 8
Q401	B - 6
Q402	B - 6
Q403	B - 6
Q405	C - 6
Q407	C - 7
Q409	D - 7
Q417	C - 6
Q418	B - 5
Q419	C - 6
Q420	C - 6
Q421	B - 5
Q422	B - 5
Q423	C - 5
Q424	C - 5
Q428	D - 6
Q431	B - 5
Q434	C - 5
Q439	C - 6
Q443	C - 5
Q444	B - 5
Q500	F - 2
Q501	D - 2
Q502	D - 3
Q503	B - 3
Q505	E - 5
Q506	B - 4
Q507	E - 5
Q508	C - 4
Q509	G - 5
Q511	F - 2
Q512	A - 1
Q513	A - 1
Q514	B - 4
Q515	B - 2

Q517	C - 4
Q519	C - 4
Q520	B - 4
Q522	E - 5
Q524	A - 5
Q525	A - 4
Q526	A - 3

DIODE	
D101	B - 10
D102	B - 9
D103	B - 9
D107	B - 9
D200	A - 4
D301	G - 8
D302	F - 9
D303	F - 7
D304	G - 7
D307	G - 8
D309	G - 8
D310	G - 8
D311	G - 9
D315	E - 8
D317	D - 9
D320	D - 9
D322	D - 9
D323	C - 9
D324	E - 9
D325	D - 8
D326	E - 9
D333	D - 8
D337	E - 8
D344	D - 8
D345	E - 7
D346	E - 7
D347	E - 7
D353	D - 8
D354	B - 7
D355	C - 7
D363	E - 8
D364	E - 8
D401	B - 7
D404	D - 6
D405	B - 5
D407	D - 7

D408	B - 5
D410	C - 5
D411	B - 6
D421	C - 5
D422	C - 5
D425	C - 5
D426	C - 6
D427	B - 6
D500	G - 5
D501	G - 2
D502	E - 2
D503	C - 2
D504	D - 2
D505	E - 1
D506	D - 2
D507	G - 5
D508	G - 5
D509	G - 5
D510	F - 5
D512	D - 2
D513	E - 5
D514	E - 4
D515	F - 1
D516	F - 5
D517	D - 4
D518	E - 5
D519	C - 4
D522	A - 4
D523	A - 2
D524	C - 2
D525	C - 2
D526	B - 4
D527	B - 3
D528	A - 1
D529	A - 2
D530	A - 1
D531	A - 4
D532	A - 4
D533	G - 1
D534	B - 4
D536	A - 5

VARIABLE RESISTOR	
RV501	B - 2

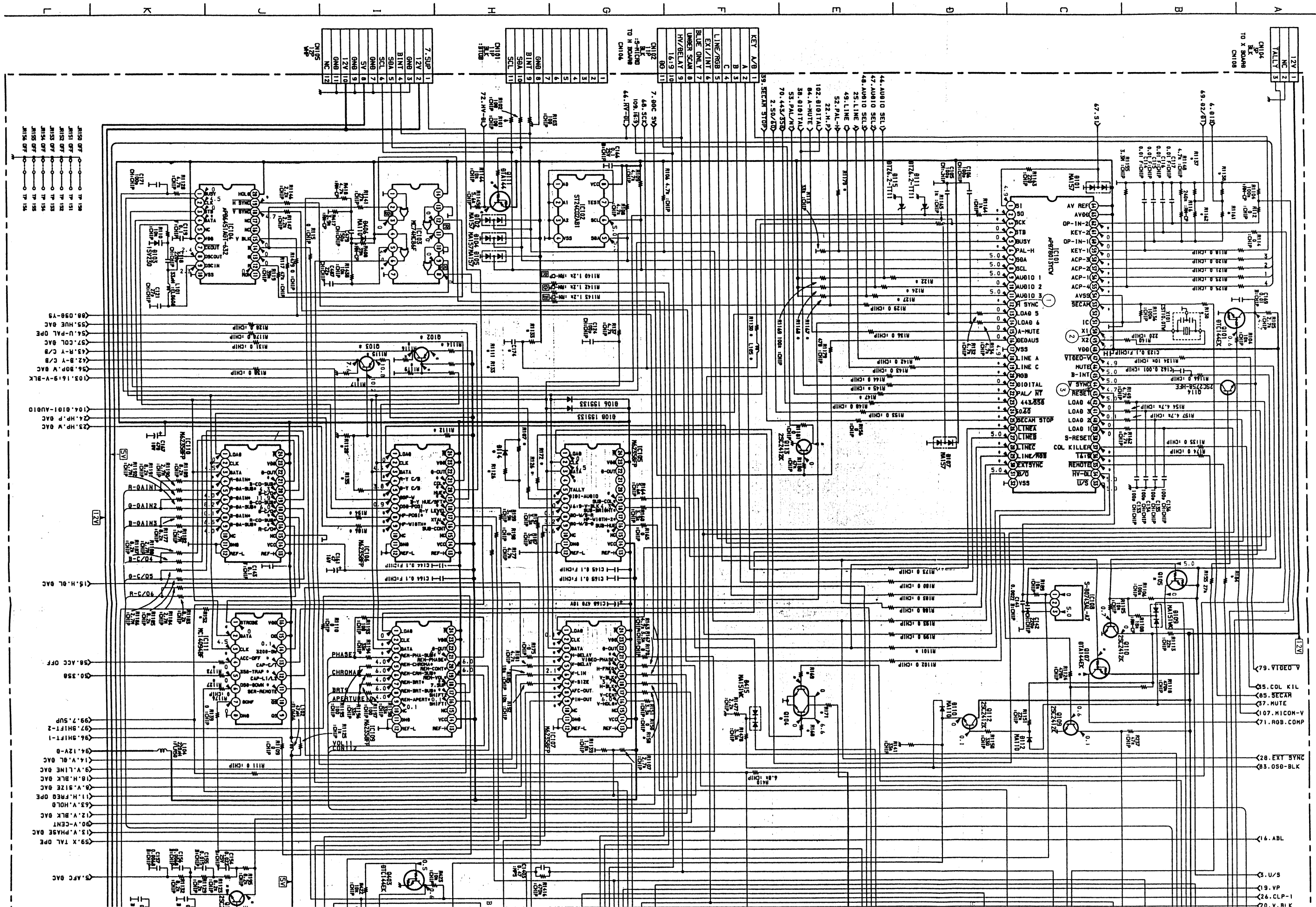
CN104
TO X BOARD
CN108
CN105
CN101
CN102
TO H BOARD
CN106
IC101
IC104
IC105
IC106
IC107
IC108
IC110
IC111
IC102
PHASE2
CHROMA
BRTS
APERTURE
VOL11
CONT12

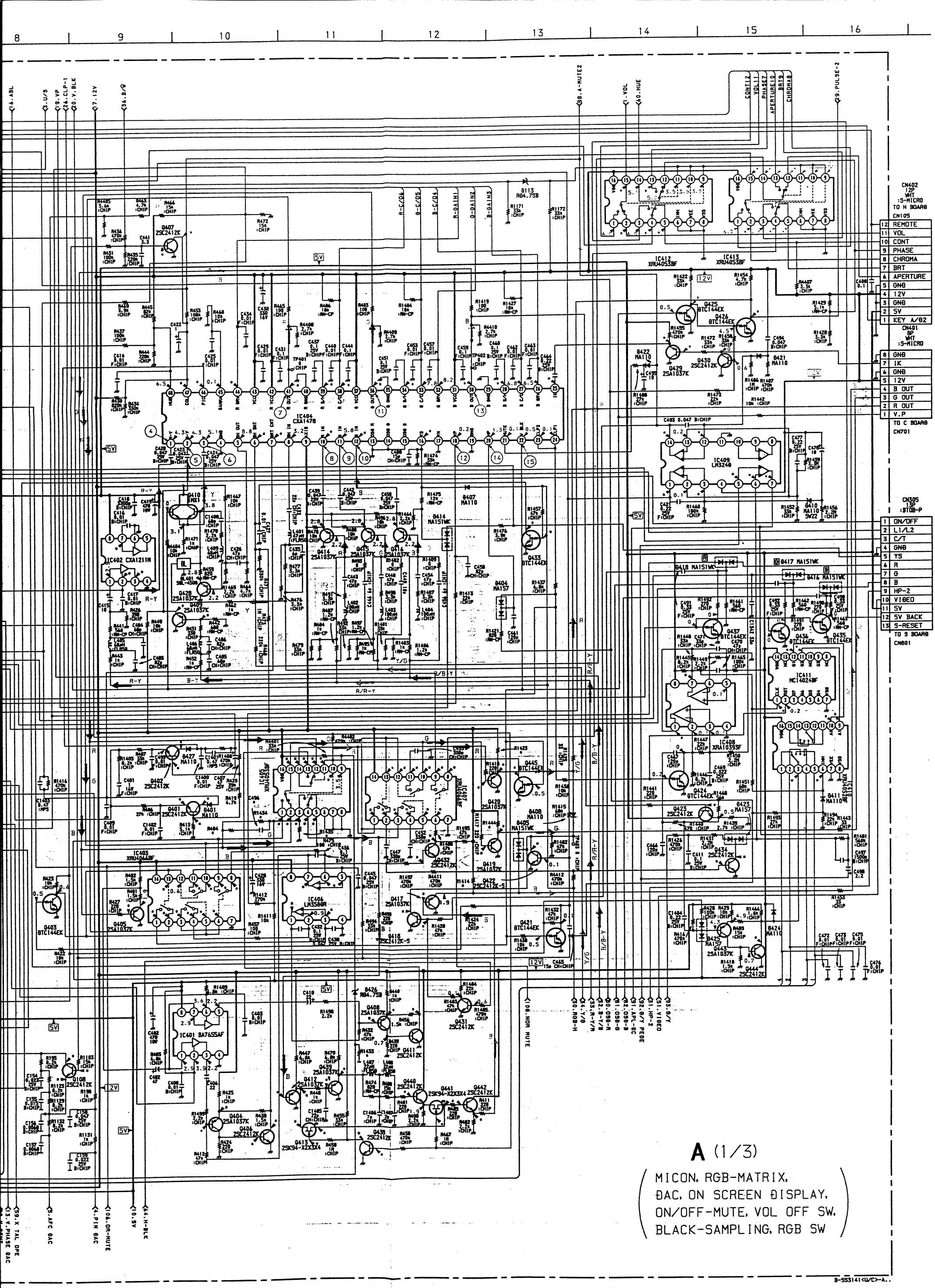
CN402
12P
WHT
:S-MICRO
TO H BOARD
CN105
12 REMOTE
11 VOL
10 CONT
9 PHASE
8 CHROMA
7 BRT
6 APERTURE
5 GND
4 12V
3 GND
2 SV
1 KEY A/D2
CN401
8P
WHT
:S-MICRO
8 GND
7 IK
6 GND
5 12V
4 B OUT
3 G OUT
2 R OUT
1 V.P
TO C BOARD
CN701
CN305
13P
:BTOB-P
1 ON/OFF
2 L1/L2
3 C/T
4 GND
5 YS
6 R
7 G
8 B
9 HP-2
10 VIDEO
11 SV
12 SV BACK
13 S-RESET
TO S BOARD
CN801
IC404
CXA1478
IC402 CXA1211N
IC401 BA7655AF
IC406
LM3580R
IC409
LM3240
IC412
XRU4053BF
IC413
XRU4053BF
IC411
MC14024BF
IC408
XRA10393F
IC405
XRU4053BF
IC407
XRU4053BF
IC403
XRU4066BF
A (1/3)
MICON, RGB-MATRIX,
DAC, ON SCREEN DISPLAY,
ON/OFF-MUTE, VOL OFF SW,
BLACK-SAMPLING, RGB SW

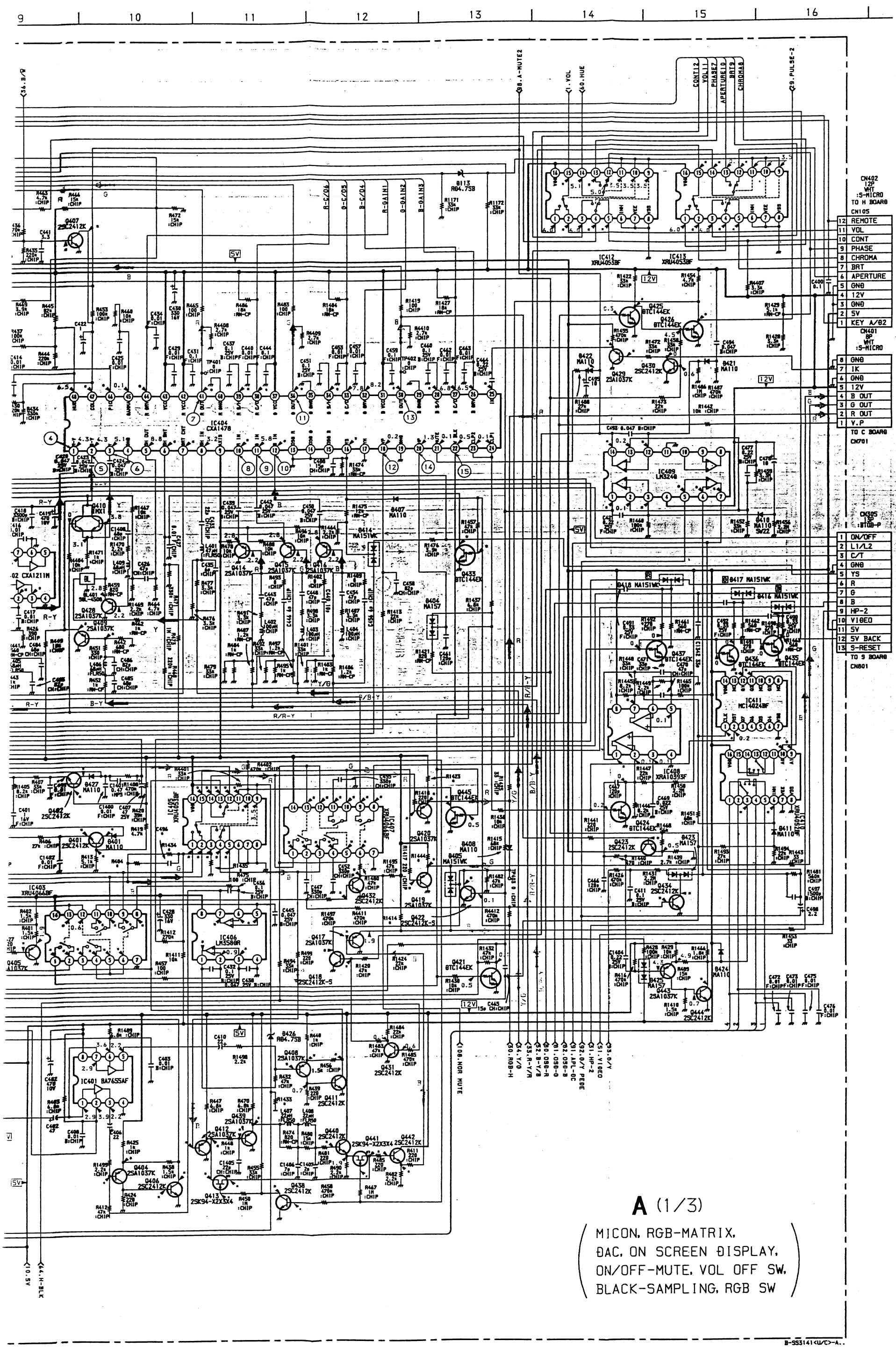
CN402
12P
WHT
:S-MICRO
TO H BOARD
CN105
12 REMOTE
11 VOL
10 CONT
9 PHASE
8 CHROMA
7 BRT
6 APERTURE
5 GND
4 12V
3 GND
2 5V
1 KEY A/D2
CN401
8P
WHT
:S-MICRO
8 GND
7 IK
6 GND
5 12V
4 B OUT
3 G OUT
2 R OUT
1 V.P
TO C BOARD
CN701
CN305
15P
:BTOB-P
1 ON/OFF
2 L1/L2
3 C/T
4 GND
5 YS
6 R
7 G
8 B
9 HP-2
10 VIDEO
11 5V
12 5V BACK
13 S-RESET
TO 9 BOARD
CN801
IC404
CXA1478
IC412
XRU4053BF
IC413
XRU4053BF
IC409
LM3248
IC411
MC14024BF
IC408
XRA10393F
IC405
XRU4053BF
IC406
LM3580R
IC403
XRU4066BF
IC401
BA7655AF
IC402
CXA1211N
A (1/3)
MICON, RGB-MATRIX,
DAC, ON SCREEN DISPLAY,
ON/OFF-MUTE, VOL OFF SW,
BLACK-SAMPLING, RGB SW
B-SS3141<U/C>-A..

• A BOARD WAVEFORMS

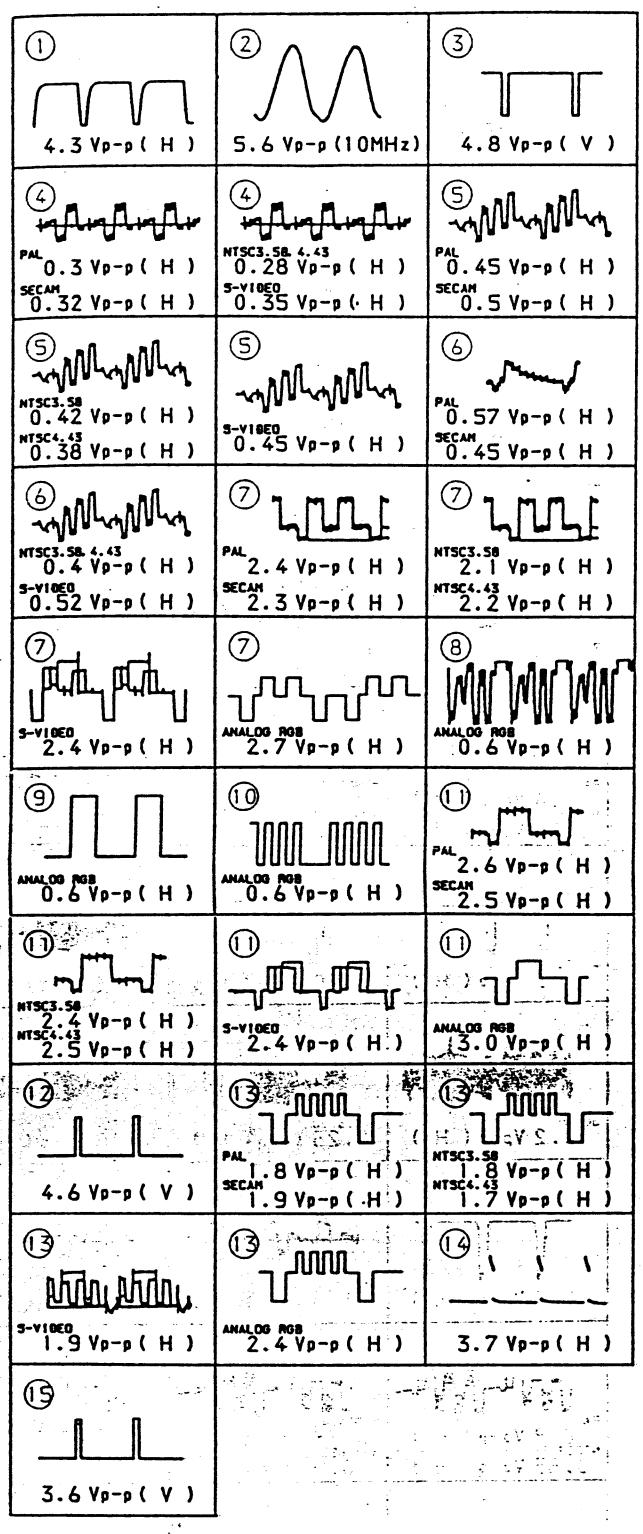

A BOARD

Ref	LOCATION	PVM-1350	PVM-1351Q/1354Q
C174	H – 3	–	47P
C498	H – 10	–	82P
CN104	A – 1	–	3P
CN105	I – 1	–	12P
D114	H – 4	–	MA110
D426	J – 11	–	RD4.7SB
L105	F – 3	–	100 μ H
Q102	I – 3	–	2SA1037K
Q103	I – 3	–	2SA1037K
Q104	E – 7	–	IMXIT110
Q105	B – 5	–	DTA144EK
R107	H – 4	–	4.7K
R122	D – 3	–	0
R124	D – 3	–	0
R126	G – 5	–	0
R127	D – 3	–	0
R130	B – 3	150K	120K
R133	H – 3	–	56K
R135	I – 5	–	33K
R145	D – 4	–	0
R147	E – 4	–	0
R152	J – 6	–	0
R156	E – 4	–	0
R158	G – 7	–	0
R168	E – 7	–	33K
R169	E – 6	–	270K
R171	E – 7	–	180
R172	G – 4	–	0
R174	B – 4	–	0
R184	B – 5	–	0
R186	I – 5	–	0
R194	I – 5	–	0
R404	H – 10	–	150
R1101	D – 6	–	0
R1111	H – 3	–	4.7K
R1112	H – 4	–	4.7K
R1114	H – 3	–	1K
R1115	I – 3	–	1K
R1116	I – 3	–	12K
R1117	I – 3	–	6.8K
R1119	I – 3	–	82K
R1120	I – 4	–	47K
R1126	H – 4	–	470
R1127	J – 6	–	0
R1130	F – 3	–	1K
R1133	H – 3	–	6.8K
R1137	A – 2	–	10K
R1138	A – 2	–	22K
R1161	A – 2	–	1M
R1162	A – 2	–	470K
R1167	E – 3	–	100K
R1168	E – 3	–	100K
R1169	E – 3	–	100K
R1170	E – 2	–	47K
R1173	J – 6	–	0
R1414	H – 12	2.2K	3.3K
R1423	G – 12	2.2K	3.3K
R1433	J – 11	–	33K
R1434	H – 10	0	560
R1435	H – 10	–	1.8K
R1444	H – 12	2.2K	3.3K

– : NOT MOUNT

A BOARD ＊ MARK

	PAL	SECAM	NTSC 3.58	NTSC 4.43	S-VIDEO	ANALOG RGB
IC101 ②	2.3	2.4	2.2	2.2	2.0	2.3
③	4.5	4.6	4.5	4.4	4.4	4.5
⑤	4.1	3.4	0	0.1	0	0
⑥	3.4	3.5	3.5	3.5	3.1	3.5
⑬	0	0	0	0	4.8	0
⑭	0	0	0	0	0	4.9
⑮	4.9	5.0	0	0	0	0
⑯	5.0	5.0	0	5.0	0	0
⑰	5.0	5.0	0	0	0	0
⑱	0	5.0	0	0	0	0
⑲	0.1	0	0.1	0.1	4.9	0.1
⑳	5.0	5.0	5.0	5.0	0	5.0
㉑	5.0	5.0	5.0	5.0	4.9	0.1
㉒	5.0	5.0	5.0	5.0	5.0	0.1
㉓	4.2	4.1	4.6	5.0	3.9	3.9
㉔	4.0	4.0	4.6	5.0	3.6	3.7
㉕	0.3	4.4	0.1	0.7	0.1	0.1
㉖	4.2	0.1	4.3	4.2	4.2	4.3
㉗	4.0	3.4	3.6	3.7	3.9	4.0
㉘	0.5	0.9	1.0	0.8	3.1	1.9
㉙	3.0	2.5	2.6	2.3	3.8	2.2
㉚	3.6	3.0	2.9	3.2	3.9	4.0
㉛	4.0	4.0	4.0	4.0	2.9	4.0
IC103 ⑥	0.2	0	0.2	0.2	0	0
IC104 ④	2.3	2.3	2.2	2.2	2.0	2.3
⑬	3.5	3.5	3.5	3.5	3.1	3.5
IC105 ③	2.3	2.3	2.2	2.2	0	2.3
⑤	0	0.1	0.1	0	11.8	0
⑮	2.6	2.7	2.7	2.6	2.8	2.6
⑬	5.4	5.4	5.4	5.4	6.6	8.1
IC106 ③	2.3	2.3	2.2	2.2	2.1	2.3
⑤	5.4	5.4	5.4	5.4	4.1	5.4
⑦	2.4	2.4	2.4	2.4	0.6	2.4
⑧	7.8	7.8	7.8	7.7	5.5	7.8
⑨	5.1	5.1	5.1	5.1	4.0	5.1
⑮	0.1	10.5	10.5	10.5	10.9	10.5
⑪	3.1	3.1	2.6	3.1	2.7	2.5
⑫	2.4	4.6	2.1	2.2	2.1	3.2
⑬	6.3	6.3	11.9	9.0	10.7	3.7
⑳	3.6	3.6	4.8	3.6	4.3	9.5
㉑	0.8	1.8	0.4	0.3	2.4	3.1
IC107 ②	4.6	4.5	4.5	4.5	4.4	4.5
③	2.3	2.3	2.2	0	2.1	0
④	2.8	2.8	2.8	2.8	3.3	2.9
⑥	1.5	1.4	1.4	1.4	2.3	1.4
⑦	2.9	2.9	2.9	2.9	2.1	2.9
⑧	2.6	2.6	2.6	2.6	2.9	2.6
⑨	2.9	2.9	2.9	2.9	2.6	2.9
⑰	2.6	2.6	2.8	2.8	2.8	2.8
⑲	3.2	3.2	5.4	5.4	5.3	5.4
⑳	4.5	4.6	5.0	5.0	3.7	5.0
㉑	6.3	6.3	6.1	6.1	6.0	6.1
IC109 ②	4.6	4.5	4.5	4.5	4.4	4.4
③	2.3	2.3	2.2	2.2	2.1	2.3
⑰	11.9	11.9	11.9	11.9	11.9	0.1
⑱	11.9	11.9	0.1	0	0.1	11.8
IC110 ③	2.3	2.4	2.2	2.2	2.0	2.2
④	7.2	7.2	7.2	7.2	8.3	7.2
⑯	5.8	5.8	5.8	5.8	6.2	5.8
⑰	11.9	11.9	11.9	11.9	7.8	11.9
⑪	0	7.9	7.9	7.9	7.8	7.9
⑫	3.7	3.7	3.5	3.5	3.5	3.6
IC111 ④	0.3	0.3	0.3	0.3	0	0.3
⑪	0.2	0	0.1	0.1	0.1	0.1
⑫	0	5.0	5.0	5.0	0	5.0
⑬	5.0	5.0	5.0	5.0	0	5.0
IC402 ②	3.1	3.9	2.9	3.0	3.0	3.6
③	0	2.3	2.3	0	2.2	2.2
⑦	2.9	2.9	2.9	0	2.9	2.9
IC403 ①	0.8	0.8	0.8	0.8	0.8	0
②	1.2	1.2	0.8	0.8	1.2	0.9
③	1.4	1.3	0.9	0.9	1.3	0
④	0.8	0.8	0.9	0.9	0.8	1.4
⑤	0.6	0.5	0.6	0.6	0	0.6
⑥	0.5	0.6	0.6	0.6	0.6	0
⑧	1.0	1.0	1.0	1.0	0.8	1.1
⑨	1.6	1.5	1.1	1.1	1.4	1.6
⑩	1.4	1.4	1.0	1.0	1.2	1.5
⑪	0.9	1.0	1.0	1.0	0.8	1.1
⑬	0.6	0.6	0.6	0.6	0	0.6
IC404 ⑥	3.0	3.0	3.0	3.0	4.5	0
⑦	4.9	4.9	4.9	4.9	4.7	6.1
⑩	5.6	5.6	5.6	5.6	5.6	5.8
⑫	5.6	5.6	5.6	5.6	5.6	5.6
⑮	0	0.1	0	0	0	4.4
㉕	3.8	4.0	4.1	4.2	4.0	3.9
㉖	7.1	6.6	8.0	8.0	7.7	7.9
㉗	1.4	1.3	1.2	1.1	1.2	1.4
㉘	7.0	7.3	8.1	7.8	7.8	7.8
㉙	1.4	1.3	1.2	1.1	1.2	1.5
㉚	7.6	7.8	7.7	7.8	8.0	7.7
㉛	6.9	7.1	7.8	7.7	7.6	7.6
㊵	1.2	1.2	1.0	1.0	1.2	1.3
㊶	7.2	7.2	7.2	7.2	8.3	7.2
㊷	7.2	7.2	7.2	7.2	6.9	7.2
㊸	6.6	6.6	6.6	6.6	5.5	0
IC405 ①	1.6	1.5	1.1	1.3	1.4	1.5
②	1.4	1.4	0.9	1.0	1.2	1.5
③	1.2	1.2	0.9	1.0	1.1	1.2
④	1.4	1.3	1.0	1.0	1.2	1.4
⑤	1.3	1.3	1.0	1.0	1.2	1.4
⑩	0.5	0.5	0.6	1.0	0.3	0.2
⑪	0.5	0.5	0.6	1.3	0.3	0.2
⑫	1.2	1.2	0.8	1.1	1.2	1.3
⑬	1.4	1.3	0.9	1.3	1.3	1.4
⑭	1.2	1.2	0.8	1.2	1.2	1.3
⑮	1.4	1.3	1.0	1.3	1.2	1.5
IC406 ①	4.8	5.1	4.8	4.8	4.9	5.1
③	0.8	0	0.9	1.9	0.8	1.0
⑤	1.0	0.9	1.0	1.0	0.8	1.1
⑥	1.0	1.0	1.1	1.1	0.8	1.1
⑦	5.1	5.1	4.9	4.9	4.9	5.1
IC407 ①	1.2	1.2	0.9	1.2	1.2	1.3
②	0.4	-0.1	0.5	1.3	0.4	0.5
③	1.4	1.3	1.0	1.3	1.2	1.4
④	0.6	0	0.7	1.5	0.5	0.7
⑤	2.0	1.8	2.0	2.0	2.0	2.0
⑥	11.7	10.7	11.6	11.3	11.7	11.2
⑧	5.5	5.5	5.5	5.5	5.4	5.5
⑨	5.5	5.5	5.5	5.5	5.4	5.5
⑩	1.4	1.4	1.0	1.3	1.2	1.5
⑪	0.6	-0.1	0.7	1.6	0.5	0.7
⑫	2.0	1.7	2.0	2.0	2.0	2.0
⑬	2.0	1.7	2.0	2.0	2.0	2.0
IC408 ①	3.1	2.9	2.9	3.1	3.7	3.4
②	4.1	3.8	3.9	4.1	4.2	4.1
IC409 ①	0	5.8	5.0	4.4	0	0.5
②	0	0.6	0.4	1.3	0.3	1.3
③	5.9	5.9	6.3	6.0	5.9	5.9
⑤	5.9	5.9	6.3	6.0	5.9	5.9
⑥	5.9	5.9	6.3	6.0	5.9	5.9
⑫	0.1	1.8	0.5	1.2	0.1	[illegible]
⑭	0	10.7	5.5	5.9	0	[illegible]

	PAL	SECAM	NTSC 3.58	NTSC 4.43	S-VIDEO	ANALOG RGB
IC410 ①	3.9	4.0	4.0	4.0	0	3.9
②	3.0	3.1	2.4	3.1	0	4.0
③	1.3	0.7	1.4	1.6	2.3	1.5
④	3.5	3.6	3.0	3.8	3.9	3.9
⑤	0.5	1.3	1.1	1.1	3.1	1.7
⑥	4.0	4.0	4.0	3.9	0	0
⑨	0	2.0	1.9	1.8	2.5	1.4
⑬	2.0	2.3	2.3	2.0	1.8	3.0
IC411 ①	4.1	4.0	3.9	3.8	4.2	4.1
⑪	1.8	2.0	1.9	1.8	2.5	1.3
⑫	2.0	2.3	2.3	2.1	1.8	3.0
IC412 ①	0.4	0.5	0.4	0.4	5.9	0.5
④	8.9	8.9	8.9	8.9	8.9	9.3
⑤	9.0	8.9	9.0	8.9	8.9	8.3
⑪	5.0	6.0	6.0	6.0	5.0	0
⑫	0.4	0.5	0.4	0.4	5.9	0.5
IC413 ①	7.9	8.0	8.0	8.0	0	6.9
⑧	0	5.5	5.5	5.5	5.4	0
⑨	5.5	5.5	5.5	5.5	5.4	8.6
⑪	3.1	3.1	3.1	3.1	0	5.1
⑫	3.1	3.1	3.1	3.1	6.0	5.1
⑬	7.9	7.9	8.0	7.9	6.3	6.9
Q102 B	10.9	10.9	10.9	10.9	10.7	10.9
C	8.1	8.1	8.1	8.1	0	8.1
E	11.5	11.5	11.5	11.5	11.3	11.5
Q104 B	-0.2	0	-0.2	0	0	-0.2
Q107 B	5.0	5.0	5.0	5.0	5.0	0.1
C	0	0	0	0	0	5.0
Q108 C	2.6	2.6	2.6	2.6	2.9	2.6
E	2.6	2.6	2.6	2.6	2.9	2.6
Q111 B	5.0	5.0	0	0	4.9	4.9
C	0.4	0.4	0	0	0.4	0.4
Q113 C	4.1	4.3	4.2	4.2	3.8	4.0
Q401 B	1.1	0.8	1.5	1.6	1.2	1.0
C	7.5	5.5	6.0	5.2	8.4	10.0
E	1.4	1.6	3.2	3.4	3.1	1.0
Q402 B	0.5	0.5	0.5	0.5	2.4	0.5
C	9.5	7.7	8.1	7.4	10.4	6.9
E	1.4	1.6	3.2	3.3	3.2	1.0
Q404 B	5.3	4.1	4.9	5.2	5.3	5.2
E	6.1	6.3	6.0	6.1	6.1	6.2
Q405 B	1.3	1.3	1.2	1.1	1.2	1.4
Q406 B	0.7	0.7	0	0.7	0.7	0.7
C	1.6	1.5	1.0	1.5	1.4	1.6
Q407 B	0	0	0	0	0	0.6
C	6.6	6.6	6.6	6.6	5.4	0
Q408 B	5.3	4.7	4.9	5.0	5.2	5.2
E	6.0	6.2	5.9	6.1	6.0	6.1
Q409 B	1.9	1.6	1.6	1.6	1.7	1.6
E	2.0	2.2	2.2	2.2	2.3	2.2
Q411 C	1.4	1.4	0.9	1.3	1.3	1.4
Q412 B	1.3	1.3	1.0	1.3	1.1	1.4
E	2.0	1.9	1.7	1.9	1.8	2.0
Q413 G	2.0	-15.1	1.6	-2.2	1.8	-2.1
D	2.0	1.9	-4.3	0	2.2	2.0
S	2.0	1.9	1.7	1.9	1.8	2.0
Q417 B	1.4	1.4	1.2	1.2	1.2	1.4
Q418 C	2.1	2.1	1.7	1.7	1.7	2.0
Q419 B	1.4	1.4	1.2	1.1	1.2	1.5
E	2.0	1.9	1.7	1.7	1.8	2.0
Q420 B	1.2	1.2	1.0	1.0	1.2	1.3
E	1.8	1.8	1.6	1.6	1.8	1.9
Q422 C	2.1	2.1	1.7	1.7	1.8	2.0
Q423 B	0.5	0.3	0.4	0.4	0.4	0.2
Q425 C	4.5	4.5	4.5	4.5	4.7	4.5
Q426 C	0.8	0.8	0.7	0.7	0.7	0
Q429 B	0.1	0.8	0.4	0.4	0.1	0.1
E	0	-2.3	-1.2	-1.2	0.4	0.4
Q432 B	-0.3	-3.8	-3.4	-2.7	-0.1	-3.9
C	11.9	11.6	11.8	11.8	12.0	11.6
Q433 B	0	-0.1	0	0	0	2.7
C	3.0	3.0	3.0	3.0	4.5	0
Q434 B	-0.1	0	0	0	-0.1	0.4
C	3.6	4.7	4.5	4.8	2.9	0
Q438 B	-0.4	-2.9	-3.1	-2.4	0	-2.4
C	11.7	11.4	11.7	11.7	11.6	11.7
Q439 B	2.0	1.9	1.8	1.7	1.9	2.0
E	2.5	2.5	2.4	2.4	0	2.5
Q440 B	2.5	2.5	2.5	2.5	2.4	2.7
Q441 G	-1.1	-13.0	1.7	-4.6	0	-0.7
D	2.0	1.9	-8.1	1.9	1.9	2.0
S	2.0	1.9	1.6	1.9	1.8	2.0
Q442 B	1.3	1.3	1.1	1.1	1.1	2.1
E	0.9	0.9	0.7	0.7	0.7	1.5
Q444 C	1.2	1.1	1.2	1.4	2.2	1.3
Q445 C	0.4	1.2	1.4	1.3	0.3	0.4

	LOCATION	PVM-1350	PVM-1351Q/1354Q
	– 3	–	DTZ6.2
	J – 5	–	MA151WK
	J – 7	–	1S2835
	G – 7	MA110	–
	A – 8	–	MA100
	J – 10	–	MA157
	J – 10	–	MA157
	I – 14	–	1SV230TP HR3
	C – 11	–	MA151WK
	H – 14	–	1SV230TP HR3
	B – 11	–	MA110
	I – 15	–	MA110
	J – 16	–	MA110
7	B – 13	–	MA110
9	H – 15	–	MA110
41	A – 12	–	DTZ3.6A
344	E – 12	–	MA151WK
D348	J – 9	–	MA157
D349	J – 9	–	MA157
D350	J – 9	–	MA157
D351	K – 9	–	MA157
D352	J – 9	–	MA157
D353	K – 9	–	MA157
D354	K – 9	–	MA157
D355	K – 9	–	MA157
D362	B – 12	–	RD10SB1
D363	B – 12	–	RD10SB1
D364	B – 12	–	1S2835
D365	B – 6	–	MA110
FL300	B – 3	–	○
FL401	B – 4	–	○
IC301	H – 5	–	BA7655AF
IC303	H – 14	–	CXA1214P
IC313	C – 6	MM1148XFF	MM1149XFF
IC315	B – 12	–	XRU4053BF
IC316	B – 2	–	MM1148XFF
IC317	B – 9	–	MC1458BF
JR306	B – 3	0	–
L301	I – 13	–	15μH
L302	I – 15	–	15μH
L303	I – 14	–	39μH
L304	H – 15	–	15μH
L306	G – 14	–	39 μH
L307	H – 13	–	15μH
L317	C – 9	–	18mmH
L319	B – 3	–	100μH
Q302	G – 2	–	2SA1037K
Q306	D – 3	–	2SC2412K
Q310	C – 3	–	2SA1037K
Q314	D – 4	–	DTA144EK
Q317	G – 7	2SC2412K	–
Q323	I – 6	–	DTC144EK
Q324	E – 6	–	DTC144EK
Q328	H – 7	–	2SK94
Q332	H – 8	–	DTC144EK
Q333	C – 8	–	2SC2412K
Q334	I – 12	–	2SA1037K
Q335	B – 8	–	2SC2412K
Q336	I – 13	–	2SK94
Q337	I – 13	–	2SC2412K
Q339	C – 10	–	2SA1037K
Q346	I – 15	–	2SC2412K
Q347	G – 15	–	DTC144EK
Q348	I – 16	–	2SA1037K
Q349	H – 16	–	2SA1037K
Q355	B – 3	–	2SC2412K
Q356	C – 11	–	DTC144EK
Q357	I – 6	–	2SC2412K
Q358	H – 3	–	2SC2412K
Q359	H – 3	–	2SA1037K
Q362	E – 12	–	2SC2412K
Q366	B – 13	–	2SA1037K
Q367	B – 13	–	2SA1037K
Q368	B – 13	–	2SA1037K
Q369	B – 12	–	DTA144EK

○:TO BE MOUNT
–: NOT MOUNT

Ref	LOCATION	PVM-1350	PVM-1351Q/1354Q
R301	D – 9	–	100
R303	E – 9	–	100
R305	K – 13	–	0
R306	K – 13	–	0
R311	K – 7	–	1.8K
R319	I – 5	–	6.8K
R332	J – 7	–	100K
R333	J – 7	–	100K
R337	J – 15	–	10K
R338	J – 15	–	56K
R339	J – 13	–	8.2K
R340	J – 14	–	47K
R341	J – 15	–	8.2K
R343	J – 14	–	82K
R344	J – 13	–	120K
R347	J – 13	–	4.7K
R348	I – 12	–	180
R349	J – 7	–	82K
R351	J – 7	–	3.3K
R352	I – 15	–	10K
R353	I – 13	–	1K
R355	I – 13	–	2.7K
R356	J – 14	–	39K
R357	J – 7	–	1M
R358	I – 13	–	1.5K
R359	I – 15	–	4.7K
R360	I – 13	–	390
R361	J – 1	–	100
R362	I – 12	–	5.6K
R363	I – 13	–	470K
R364	I – 14	–	470K
R367	I – 15	–	1.2K
R368	H – 12	–	1K
R371	H – 16	–	6.8K
R372	H – 12	–	1.5K
R373	H – 2	–	560
R374	G – 2	–	680
R375	H – 15	–	1.5K
R379	H – 16	–	6.8K
R380	G – 2	–	4.7K
R381	H – 7	–	39K
R383	H – 15	–	3.3K
R384	H – 15	–	10K
R385	H – 13	–	4.7K
R389	G – 2	–	560
R391	H – 14	–	470K
R395	G – 2	–	680
R396	G – 14	–	470K
R1301	G – 13	–	150
R1302	G – 13	–	150
R1303	G – 14	–	390
R1315	B – 2	–	100
R1321	D – 3	–	820
R1322	D – 3	–	2.2K
R1324	D – 3	–	3.3K
R1325	C – 3	–	1.1K

○:TO BE MOUNT
–: NOT MOUNT

A BOARD ＊ MARK

	PAL	SECAM	NTSC 3.58	NTSC 4.43	S-VIDEO	ANALOG RGB
IC301 ⑭	2.8	0	2.9	3.0	3.0	2.3
⑬	2.0	0	1.8	1.7	1.7	3.5
IC302 ⑭	2.9	2.9	2.9	0.3	2.9	2.9
⑬	5.3	5.1	4.5	4.5	4.5	4.5
⑦	10.5	8.4	0	0	0	0
IC303 ⑭	2.3	2.6	2.2	2.2	2.6	2.9
⑬	0.1	4.2	0.6	0.6	0.6	0.1
⑩	3.9	2.9	3.1	3.1	3.3	3.9
IC304 ⑭	2.2	2.6	2.2	2.2	2.2	2.2
⑫	9.4	0.1	9.4	9.4	9.4	9.4
⑩	7.3	7.3	2.5	2.5	2.6	2.5
⑨	7.3	7.3	2.5	2.5	2.6	2.5
⑧	1.9	1.9	2.2	2.2	2.3	2.2
⑬	2.5	2.5	2.2	2.2	2.3	2.2
IC305 ⑭	2.8	2.9	2.8	0	2.8	2.9
⑫	2.5	1.1	2.5	2.4	2.4	1.3
⑨	4.1	4.1	4.1	4.1	4.2	4.5
⑥	0.4	0.2	0	0	0	0.1
⑬	2.6	2.6	2.5	2.4	2.5	2.7
⑳	0	0	0.8	0.8	0.9	0.9
㉒	2.1	2.7	1.9	1.9	1.9	2.7
IC306 ⑪	8.1	8.1	8.1	8.1	8.1	0
⑨	0	0	0	0.1	0.1	4.4
IC309 ⑦	3.6	0	3.6	3.6	3.6	3.6
④	0	0	0	0	0	4.4
IC310 ⑪	6.2	6.2	6.2	6.2	6.2	5.9
⑬	6.3	6.3	6.2	6.2	6.2	5.9
⑫	5.9	5.9	6.0	6.3	5.9	5.9
IC311 ⑪	0	6.2	6.2	6.2	6.2	6.2
⑫	6.2	6.2	6.2	6.2	6.2	5.9
⑭	6.2	6.3	6.3	6.2	6.2	5.9
⑯	3.3	3.3	2.9	2.9	2.9	0
⑲	5.9	5.9	5.9	6.2	5.8	5.9
⑫	0.4	0.4	0.4	0.4	0.5	0.7
IC312 ⑦	3.6	0	3.6	3.6	3.6	3.6
④	0	0	0	12.0	0.1	4.5
IC313 ⑪	0	6.3	0	6.3	6.3	6.3
IC314 ⑦	0	3.0	7.6	0	3.0	0
④	0	0	0	0	2.9	0.1
IC315 ⑪	0.4	0.4	0.4	0.4	0.4	0.6
⑭	0.6	0	0.6	0.6	0.6	0.6
⑯	9.4	9.3	9.3	9.2	9.3	9.4
⑪	2.5	2.5	2.5	2.5	2.5	7.2
⑭	0.4	0.4	0.4	0.4	0.4	0.6
⑮	0.4	0.4	0.4	0.4	0.4	0.6
IC317 ④	2.0	0	2.0	2.1	2.0	12.0
⑥	12.0	0	12.0	12.0	12.0	12.0
⑨	10.7	10.6	10.6	10.6	10.5	10.7
⑭	9.4	9.4	9.4	9.4	9.1	9.4
IC318 ⑤	11.5	11.5	0	11.4	11.4	11.4
IC320 ①	6.3	6.3	6.3	6.3	6.3	0
②	3.0	0	0	3.1	0	0
④	0	0	0	0	3.3	0
IC321 ②	0	0.1	0.1	0	2.9	0
④	0	0	0	0	0.1	2.7
IC322 ⑤	5.8	5.9	6.0	6.3	5.9	5.9
IC323 ⑤	6.2	6.3	6.2	6.2	6.2	5.9
⑦	0	5.6	5.6	5.6	5.6	5.6
IC324 ⑤	6.2	6.2	6.2	6.2	6.2	5.9
IC326 ①	5.9	5.9	6.0	6.3	5.9	5.9
②	5.9	5.9	5.9	6.2	5.8	5.9
③	5.9	5.9	5.9	6.2	5.8	5.9
⑤	1.7	1.9	1.6	1.6	2.1	2.1
⑥	2.4	1.0	2.3	2.3	2.3	4.6
⑦	0	–0.1	10.8	0	–0.1	0
⑧	6.3	6.3	6.3	6.3	6.2	5.9
⑨	6.3	6.3	6.3	6.3	6.2	5.9
⑬	6.3	6.3	6.2	6.2	6.2	5.9

	PAL	SECAM	NTSC 3.58	NTSC 4.43	S-VIDEO	ANALOG RGB
IC325 ⑫	6.2	6.2	6.2	6.2	6.2	5.9
⑬	6.2	6.2	6.2	6.3	6.2	5.9
⑭	6.2	6.2	6.2	6.2	6.2	5.9
IC350 ⑥	6.6	6.5	6.4	6.3	6.1	5.9
⑫	6.2	6.2	6.2	6.3	6.0	6.4
⑬	6.2	6.2	6.2	6.3	6.0	6.4
Q309 B	2.5	2.5	2.2	2.2	2.2	2.2
C	10.2	10.2	10.4	10.5	10.4	10.5
E	1.9	1.9	1.6	1.6	1.6	1.6
Q331 E	8.6	8.5	8.2	8.3	8.5	9.8
Q333 E	5.7	5.7	5.7	5.7	5.6	5.7
Q334 B	6.3	6.3	6.3	6.4	6.2	6.3
E	5.7	5.7	5.7	5.7	5.6	5.7
Q335 B	8.6	8.5	8.2	8.3	8.5	9.8
E	7.9	7.9	7.6	7.7	7.9	9.1
Q307 E	1.4	1.4	1.1	1.2	1.4	2.7
Q309 B	1.4	1.4	1.1	1.2	1.4	2.5
C	0.1	0.1	0.2	0.1	0.1	0
E	0.7	1.8	1.7	1.8	0	1.8
Q312 C	8.2	8.2	8.6	8.3	8.3	8.1
Q313 B	8.2	8.2	8.6	8.3	8.2	8.1
E	8.8	8.8	9.3	9.0	8.9	8.7
Q314 B	11.9	6.4	11.9	11.9	11.9	11.9
C	0	11.9	0	0	0	0
Q315 B	3.3	3.2	2.9	3.1	3.2	3.3
E	3.9	3.9	3.5	3.8	3.8	4.0
Q318 B	12.1	12.0	11.7	11.9	12.1	12.1
C	1.0	1.0	1.2	1.0	1.0	0.9
Q322 B	2.4	2.4	2.3	2.3	5.6	2.4
E	1.8	1.8	1.8	1.8	5.0	1.8
Q323 B	5.0	5.0	0	0	0	0
C	0	0	3.5	3.5	3.5	3.6
Q324 B	4.1	4.2	0	0	0	0
C	0	0	0.8	0.8	0.8	0.9
Q328 B	2.2	2.2	2.2	2.2	2.0	1.3
C	2.8	2.8	2.8	2.8	0	0
Q329 D	2.1	2.1	2.2	2.4	0	2.2
G	0	0	1.6	0	2.9	2.8
Q332 B	4.9	5.0	0	4.9	0	0
C	0	0	4.4	0	4.3	4.4
Q333 B	1.7	1.7	1.9	1.8	1.7	1.7
E	1.5	1.5	1.7	1.5	1.5	1.4
Q336 G	4.7	4.6	4.6	4.7	4.2	4.8
D	4.3	4.3	4.3	4.3	4.5	4.3
Q339 B	12.3	12.5	12.5	12.4	12.5	12.3
Q347 B	0.1	4.2	0.1	0.1	0.6	0.1
C	9.4	0.1	9.4	9.4	9.4	9.4
Q349 B	2.8	2.7	2.7	2.7	2.2	2.8
E	3.4	3.3	3.4	3.4	2.8	3.4
Q354 B	12.0	0.6	0	0	0	0
E	12.0	0.4	0	0	0	–0.2
Q358 E	2.2	2.2	0	2.2	2.2	2.2
Q360 I	6.2	6.2	6.2	6.3	6.1	6.4
3	6.2	6.2	6.2	6.3	6.0	6.4
5	1.3	4.7	2.2	4.1	5.3	3.8
Q361 B	4.9	4.9	5.0	5.0	5.0	0.8
C	0.1	0	0	0	0.1	4.9
Q362 C	9.0	9.0	9.0	9.5	9.2	8.5
Q364 C	3.3	3.3	2.9	2.9	2.8	2.9
Q365 B	0.4	0	0.3	0.3	0.4	0.4
Q369 B	0.8	0.9	0.8	0.8	0.9	4.9
Q372 B	0	0	0	0	0	4.9
C	11.7	11.7	11.8	11.8	11.7	0
Q374 B	10.4	10.3	10.1	10.3	10.7	6.4
C	0	0	0	0	6.2	6.7
E	6.4	6.4	6.3	6.3	6.1	6.7
Q375 B	10.7	10.8	10.7	10.7	10.7	5.9
C	0	0	0	0	6.3	6.4
E	6.2	6.2	6.2	6.2	6.0	6.4

Ref	LOCATION	PVM-1350	PVM-1351Q/1354Q
R1328	D – 3	–	10K
R1327	B – 12	–	10K
R1358	C – 5	–	8.2K
R1362	B – 4	–	11K
R1364	B – 5	–	10K
R1382	E – 6	–	10K
R1398	A – 9	0	–
R2302	A – 8	–	6.8K
R2303	B – 8	–	68K
R2304	B – 8	–	220K
R2305	A – 8	–	33K
R2310	A – 8	–	82K
R2313	B – 9	–	1K
R2314	C – 9	–	560
R2318	C – 10	○	6.8K
R2319	C – 10	–	68K
R2321	C – 10	–	2.2K
R2322	C – 10	–	4.7K
R2324	C – 10	–	10K
R2333	C – 10	–	47K
R2340	D – 7	–	10K
R2343	C – 11	–	22K
R2361	C – 11	–	120K
R2363	D – 12	–	4.7K
R2365	B – 11	–	33K
R2368	E – 13	–	4.7K
R2385	H – 9	–	10K
R2386	H – 9	–	10K
R2387	J – 9	–	10K
R2388	H – 11	–	10K
R2392	B – 3	–	10K
R2393	B – 3	–	10K
R3305	E – 10	–	3.3K
R3306	F – 10	–	3.9K
R3309	C – 14	–	10K
R3314	C – 12	0	–
R3315	C – 12	4.7K	–
R3316	G – 7	4.7K	–
R3318	G – 7	4.7K	–
R3319	G – 7	4.7K	–
R3320	A – 12	–	33K
R3321	G – 7	12K	–
R3322	G – 7	10K	–
R3334	E – 12	–	10K
R3335	B – 9	–	470K
R3339	K – 12	–	68K
R3340	K – 13	–	120K
R3344	I – 13	–	22K
R3345	I – 13	–	220
R3355	A – 12	–	47K
R3356	B – 13	–	1.2K
R3357	B – 13	–	1.2K
R3358	B – 13	–	1.2K
R3359	A – 12	–	22K
R3360	B – 12	–	10K
R3361	B – 12	–	47K
R3362	B – 13	–	1K
R3363	B – 13	–	1K
R3364	C – 11	–	10K
R3381	I – 6	–	470
R3382	H – 6	–	820
R3383	H – 4	–	6.8K
R3384	I – 4	–	3.3K
R3385	H – 2	–	2.2K
R3386	H – 3	–	2.2K
T300	I – 12	–	COIL
X300	H – 7	0	–

○:TO BE MOUNT
–: NOT MOUNT

Ref	LOCATION	PVM-1350	PVM-1351Q/1354Q
C300	K – 12	–	0.01
C309	K – 12	–	0.01
C310	K – 7	–	0.01 / 25V
C317	J – 15	–	15P
C319	I – 15	–	5P
C320	I – 13	–	0.01
C322	I – 12	–	120P
C323	I – 15	–	15P
C324	I – 16	–	22P
C325	J – 7	–	10
C327	I – 12	–	0.1 / 25V
C328	J – 2	–	0.01
C329	I – 15	–	100P
C330	I – 13	–	47P
C331	I – 15	–	15P
C332	I – 13	–	0.1
C333	I – 15	–	0.01
C334	I – 13	–	0.001
C335	I – 14	–	0.001
C336	I – 13	–	47 / 25V
C337	I – 13	–	0.01
C338	I – 14	–	120P
C339	H – 15	–	15P
C340	I – 8	–	0.01
C341	H – 14	–	120P
C342	H – 14	–	0.0056
C344	H – 14	–	0.001
C345	H – 14	–	0.001
C346	H – 14	–	1
C347	H – 13	–	47P
C348	G – 14	–	0.1 / 25V
C351	H – 12	–	47 / 25V
C357	G – 4	–	0.01
C389	E – 9	–	47 / 25V
C1301	D – 9	–	47 / 25V
C1303	G – 7	0.1 / 25V	–
C1304	C – 2	–	47 / 25V
C1306	C – 2	–	0.01
C1309	D – 3	–	180P
C1310	C – 3	–	0.01
C1312	D – 3	–	0.01
C1315	C – 3	–	47 / 25V
C1325	B – 5	–	0.01
C1341	A – 8	–	0.001
C1343	A – 8	–	68P
C1346	B – 8	–	47 / 25V
C1347	B – 8	–	0.01
C1348	B – 8	–	270P
C1349	A – 8	–	100P
C1350	C – 9	–	0.01
C1351	C – 9	–	1
C1352	C – 10	–	0.015
C1362	C – 11	–	82P
C1364	B – 11	–	470P
C1369	I – 13	–	27P
C1370	G – 14	–	27P
C1378	B – 4	–	15P
C1380	I – 13	–	22P
C1381	H – 13	–	22P
C1382	G – 10	–	100 / 10V
C1383	F – 10	–	47 / 25V
C1384	H – 4	–	0.1 / 25V
C1385	I – 5	–	0.01
C1386	I – 5	–	0.01
C1387	I – 4	–	0.01
C1393	I – 13	–	100P
CN303	L – 9	–	12P
CP300	C – 2	–	○
CP301	C – 3	–	○
CP302	J – 2	–	○
CP303	A – 3	○	–

○:TO BE MOUNT
–: NOT MOUNT

• A BOARD WAVEFORMS

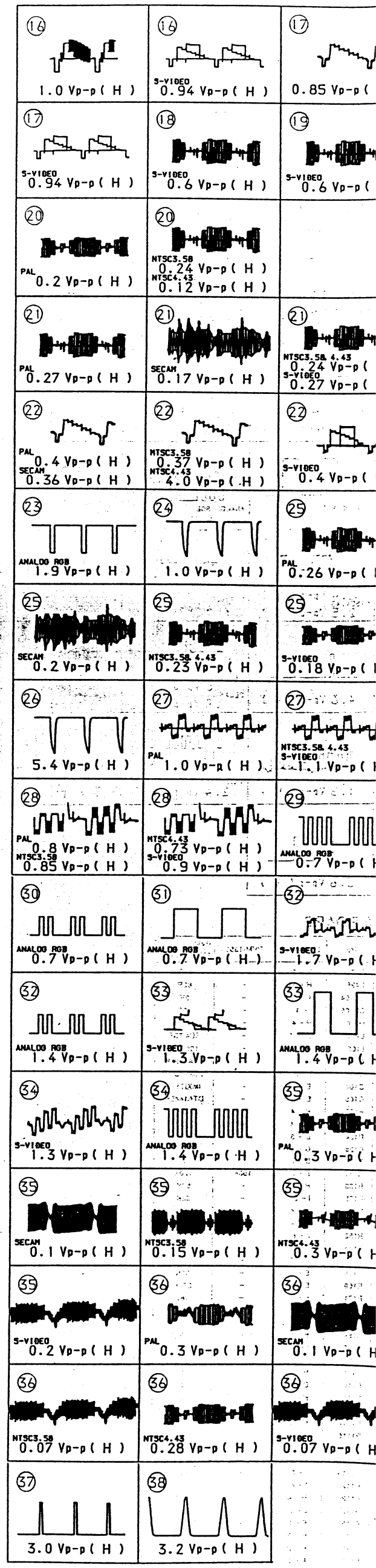

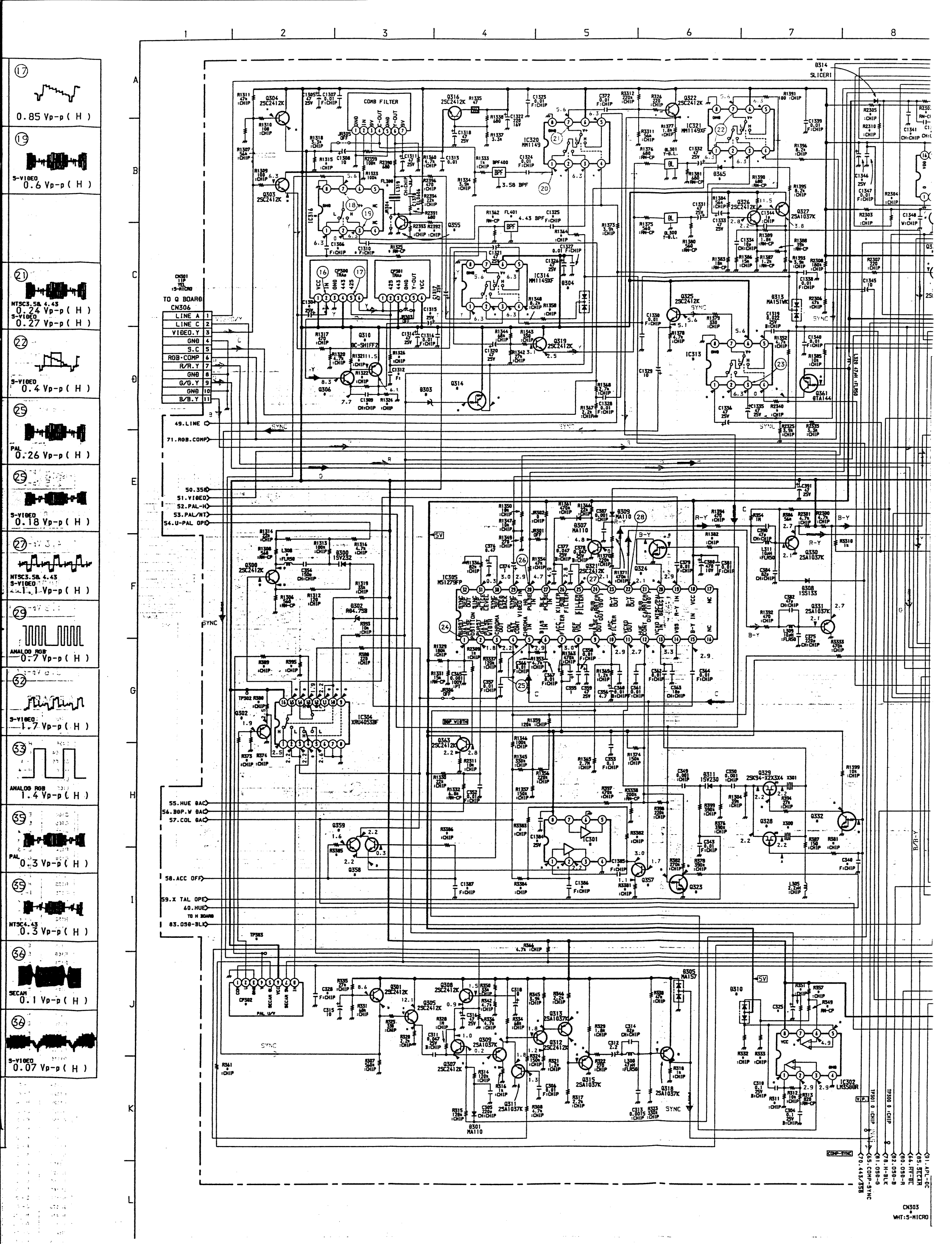
17
0.85 Vp-p (H)
19
S-VIDEO
0.6 Vp-p (H)
21
NTSC3.58 4.43
0.24 Vp-p (H)
S-VIDEO
0.27 Vp-p (H)
22
S-VIDEO
0.4 Vp-p (H)
25
PAL
0.26 Vp-p (H)
25
S-VIDEO
0.18 Vp-p (H)
27
NTSC3.58 4.43
S-VIDEO
1.1 Vp-p (H)
29
ANALOG RGB
0.7 Vp-p (H)
32
S-VIDEO
1.7 Vp-p (H)
33
ANALOG RGB
1.4 Vp-p (H)
35
PAL
0.3 Vp-p (H)
35
NTSC4.43
0.3 Vp-p (H)
36
SECAM
0.1 Vp-p (H)
36
S-VIDEO
0.07 Vp-p (H)
COMB FILTER
TO Q BOARD
CN306
LINE A
LINE C
VIDEO.Y
GND
S.C
RGB-COMP
R/R.Y
GND
G/G.Y
GND
B/B.Y
49.LINE
71.RGB.COMP
50.35B
51.VIDEO
52.PAL-H
53.PAL/NT
54.U-PAL OPE
55.HUE DAC
56.BOP.V DAC
57.COL DAC
58.ACC OFF
59.X TAL OPE
60.HUE
TO H BOARD
83.OSD-BLK
CN303
WHT:S-MICRO

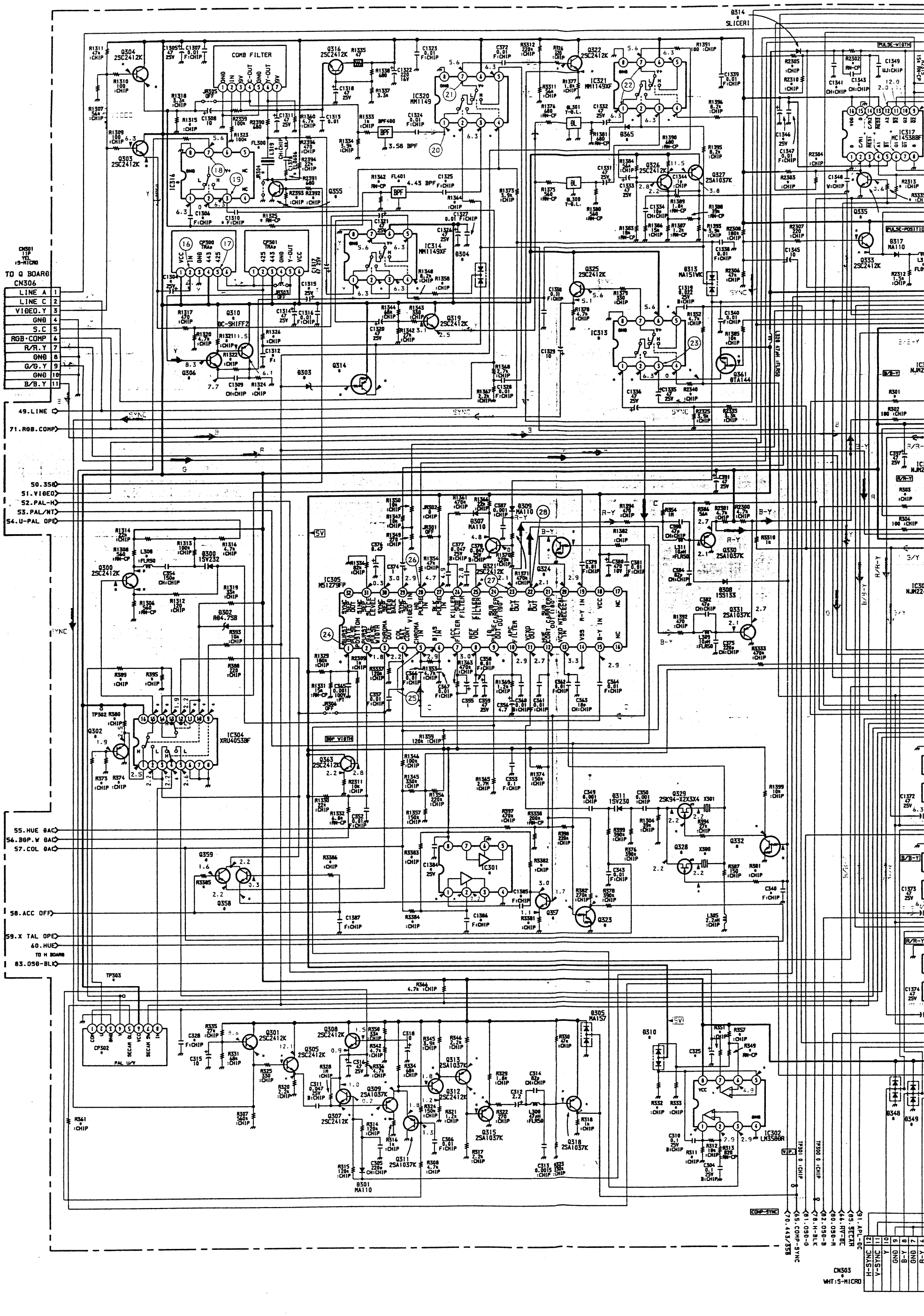
COMB FILTER
TO Q BOARD
CN306
LINE A
LINE C
VIDEO.Y
GND
S.C
RGB·COMP
R/R.Y
G/G.Y
B/B.Y
49.LINE
71.RGB.COMP
50.3SB
51.VIDEO
52.PAL-H
53.PAL/NT
54.U-PAL OPE
55.HUE DAC
56.BGP.W DAC
57.COL DAC
58.ACC OFF
59.X TAL OPE
60.HUE
83.OSD-BLK
IC305 M51279FP
IC304 XRU4053BF
IC302 LM3580R
IC301
IC313
IC314 MM1149XF
IC320 MM1149
IC321 MM1149XF
IC317 MC14538BF
CN303
WHT:S-MICRO
H-SYNC
V-SYNC
COMP-SYNC
PULSE-WIDTH
PULSE-POSITION
BGP WIDTH
PAL U/V
SECAM

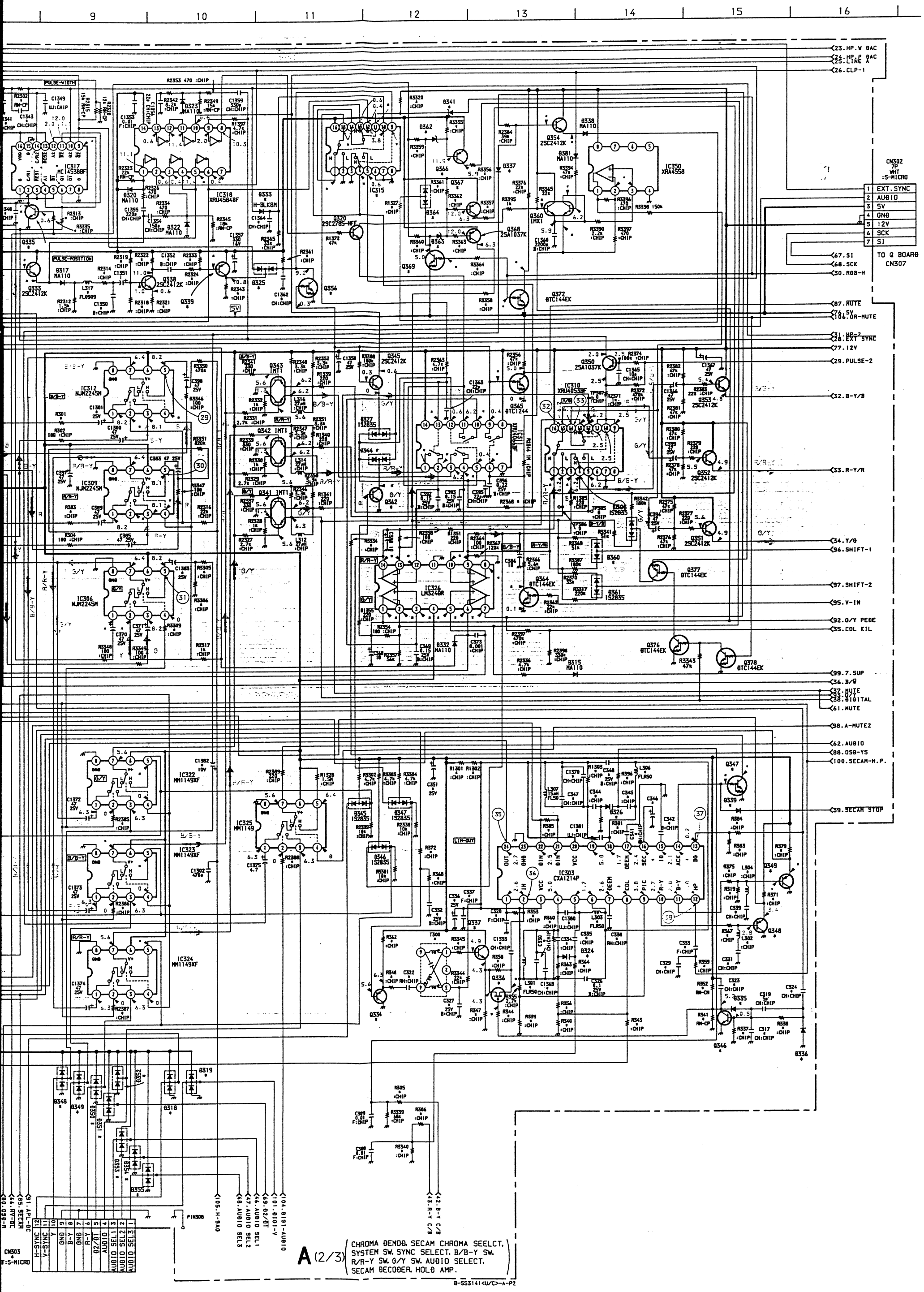
9
10
11
12
13
14
15
16
23.HP.W 0AC
24.HP.P 0AC
25.LINE A
26.CLP-1
CN302
7P
WHT
:S-MICRO
1 EXT.SYNC
2 AUDIO
3 5V
4 GND
5 12V
6 SCK
7 SI
TO Q BOARD
CN307
67.SI
68.SCK
30.RGB-H
87.MUTE
76.5V
106.DR-MUTE
31.HP-2
28.EXT SYNC
77.12V
29.PULSE-2
32.B-Y/B
33.R-Y/R
34.Y/G
96.SHIFT-1
97.SHIFT-2
95.V-IN
92.G/Y PEDE
35.COL KIL
99.7.5UP
36.B/G
37.MUTE
38.DIGITAL
61.MUTE
98.A-MUTE2
62.AUDIO
88.DSB-YS
100.SECAM-H.P.
39.SECAM STOP
IC317
MC14538BF
IC318
XRU4584BF
IC315
IC350
XRA4558
IC312
NJM2245M
IC309
NJM2245M
IC306
NJM2245M
IC326
LM3240R
IC322
MM1149XF
IC323
MM1149XF
IC325
MM1149
IC324
MM1149XF
IC303
CXA1214P
CN303
:S-MICRO
H-SYNC
V-SYNC
Y
GND
B-Y
GND
R-Y
02/BT
AUDIO
AUDIO SEL1
AUDIO SEL2
AUDIO SEL3
PIN308
A (2/3)
CHROMA DEMOD. SECAM CHROMA SEELCT.
SYSTEM SW. SYNC SELECT. B/B-Y SW.
R/R-Y SW. G/Y SW. AUDIO SELECT.
SECAM DECODER HOLD AMP.
B-SS3141<U/C>-A-P2

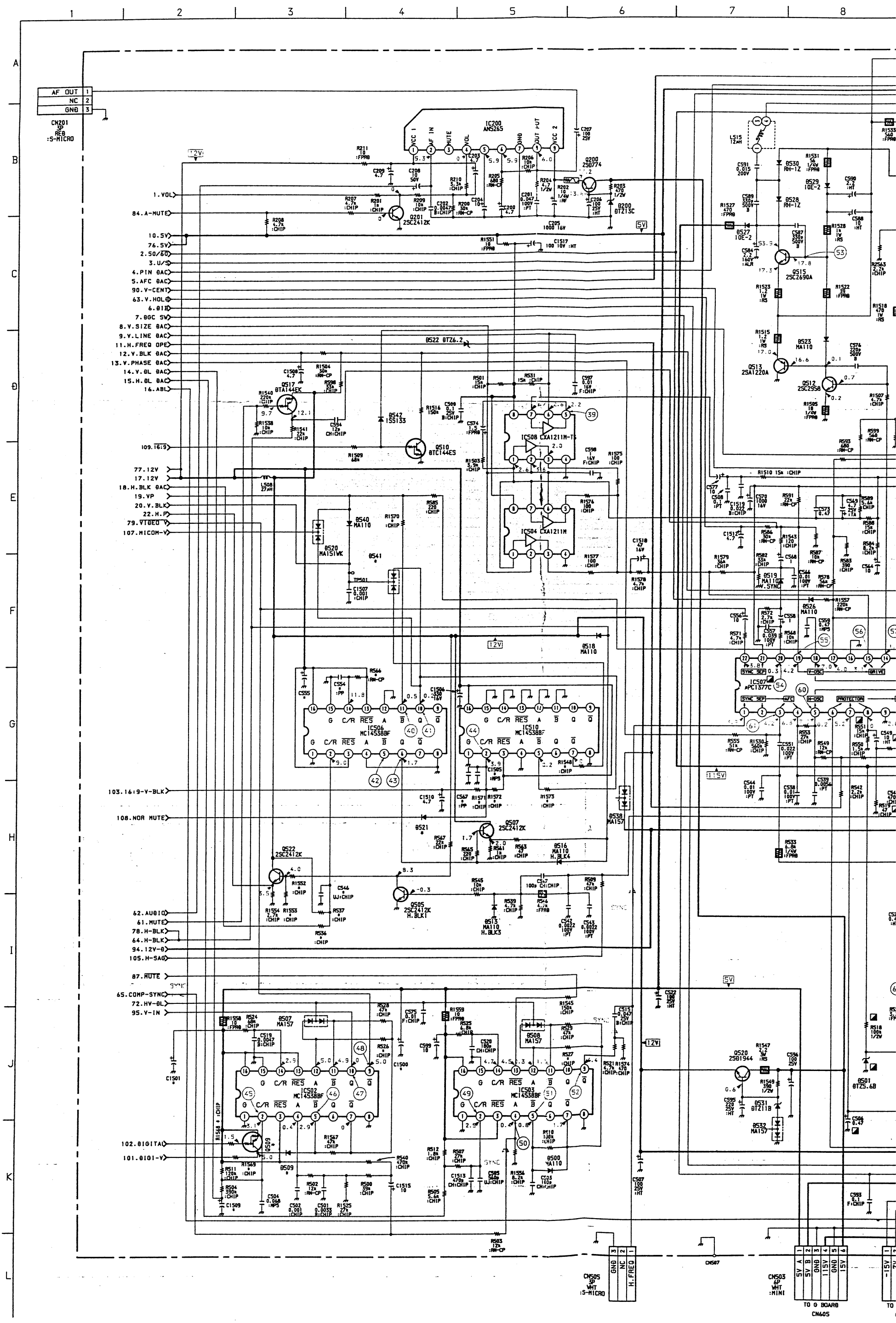
CN201
3P
RED
:S-MICRO
AF OUT
NC
GND
IC200
AN5265
IC504 CXA1211M
IC508 CXA1211M-T5
IC506
MC14538BF
IC510
MC14538BF
IC502
MC14538BF
IC503
MC14538BF
IC507
μPC1377C
SYNC SEP
V-OSC
DRIVE
AFC
H-OSC
PROTECTOR
CN505
3P
WHT
:S-MICRO
GND
NC
H.FREQ
CN507
CN503
6P
WHT
:MINI
5V A
5V B
GND
11.5V
GND
15V
TO G BOARD
CN605
-15V
TO

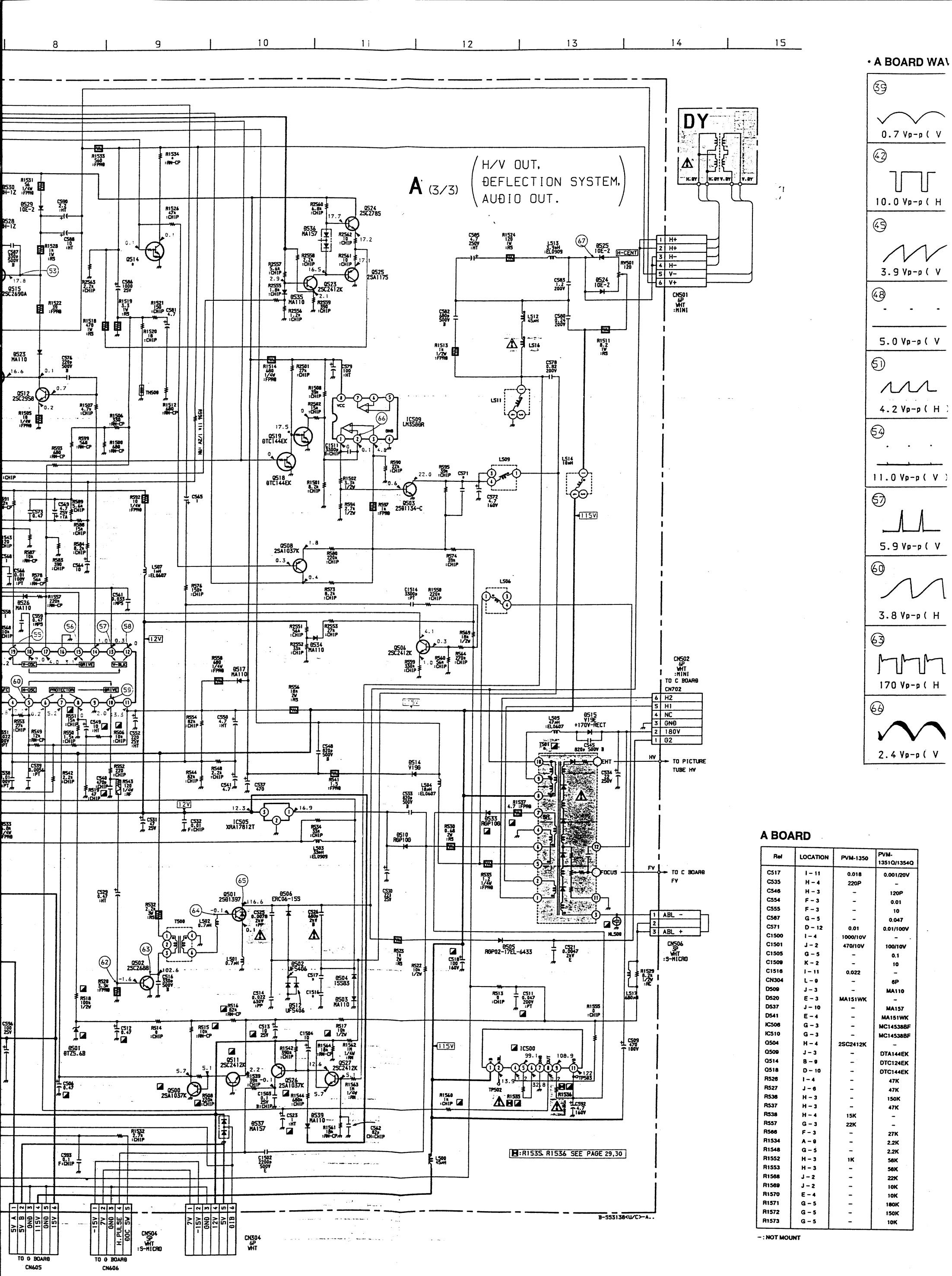

:R1535, R1536 SEE PAGE 29,30

• A BOARD WAV

A BOARD

Rel	LOCATION	PVM-1350	PVM-1351Q/1354Q
C517	I - 11	0.018	0.001/20V
C535	H - 4	220P	-
C546	H - 3	-	120P
C554	F - 3	-	0.01
C555	F - 3	-	10
C567	G - 5	-	0.047
C571	D - 12	0.01	0.01/100V
C1500	I - 4	1000/10V	-
C1501	J - 2	470/10V	100/10V
C1505	G - 5	-	0.1
C1509	K - 2	-	10
C1516	I - 11	0.022	-
CN304	L - 9	-	6P
D509	J - 3	-	MA110
D520	E - 3	MA151WK	-
D537	J - 10	-	MA157
D541	E - 4	-	MA151WK
IC506	G - 3	-	MC14538BF
IC510	G - 3	-	MC14538BF
Q504	H - 4	2SC2412K	-
Q509	J - 3	-	DTA144EK
Q514	B - 9	-	DTC124EK
Q518	D - 10	-	DTC144EK
R526	I - 4	-	47K
R527	J - 6	-	47K
R536	H - 3	-	150K
R537	H - 3	-	47K
R538	H - 4	15K	-
R557	G - 3	22K	-
R566	F - 3	-	27K
R1534	A - 9	-	2.2K
R1548	G - 5	-	2.2K
R1552	H - 3	1K	56K
R1553	H - 3	-	56K
R1568	J - 2	-	22K
R1569	J - 2	-	10K
R1570	E - 4	-	10K
R1571	G - 5	-	180K
R1572	G - 5	-	150K
R1573	G - 5	-	10K

-: NOT MOUNT

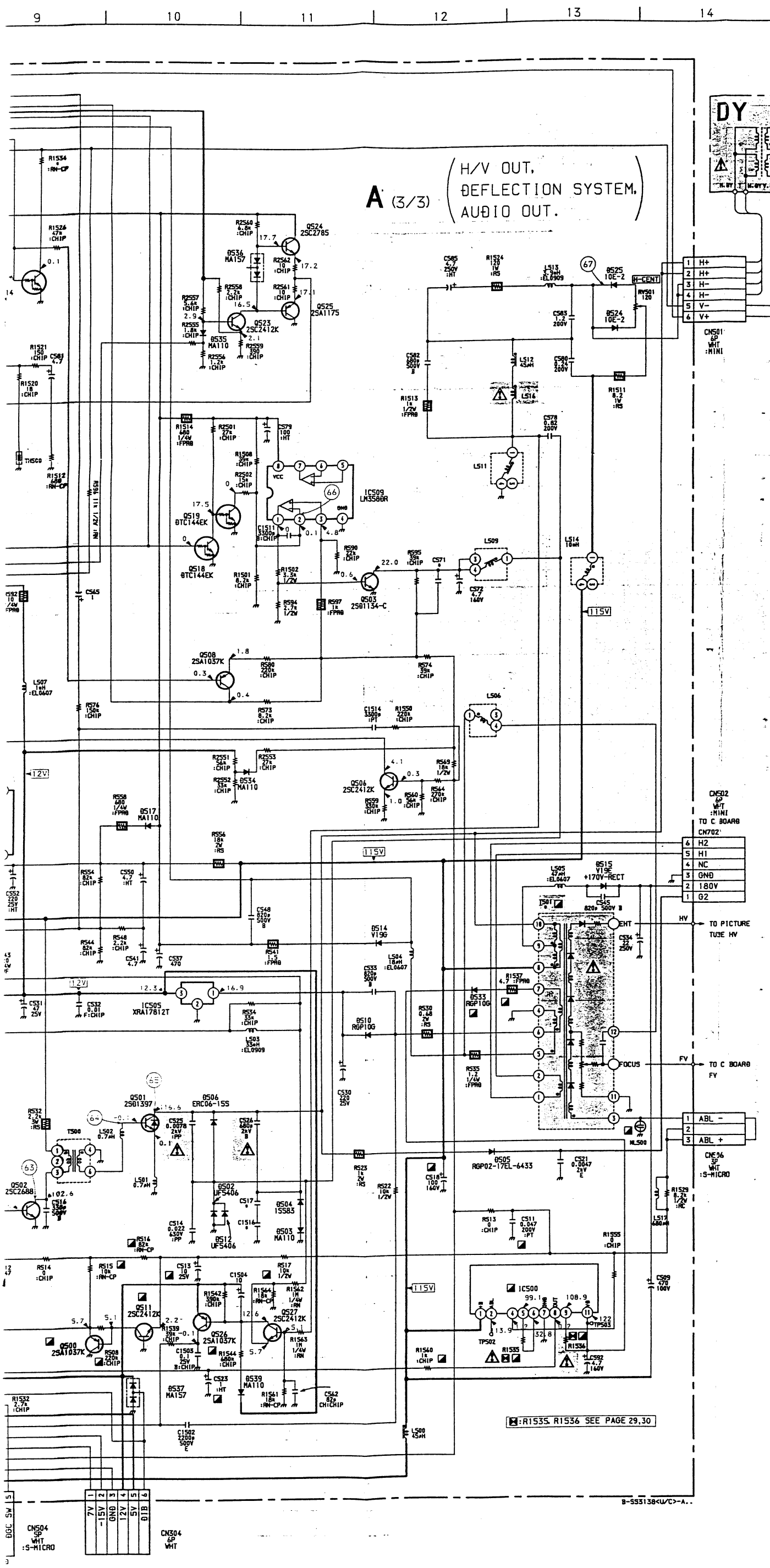

• A BOARD WAVEFORMS

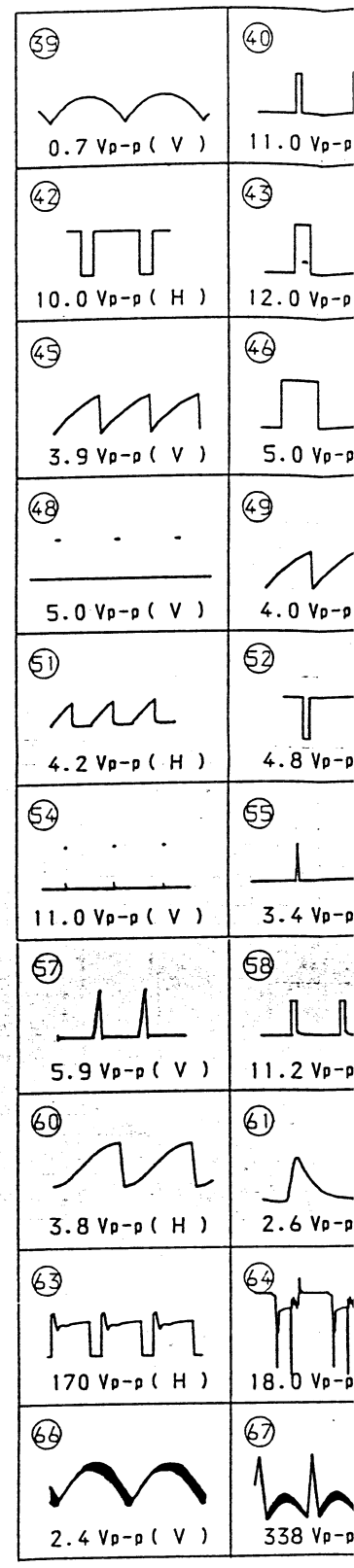

A BOARD

Ref	LOCATION	PVM-1350	PVM-1351Q/1354Q
C517	I – 11	0.018	0.001/20V
C535	H – 4	220P	–
C546	H – 3	–	120P
C554	F – 3	–	0.01
C555	F – 3	–	10
C567	G – 5	–	0.047
C571	D – 12	0.01	0.01/100V
C1500	I – 4	1000/10V	–
C1501	J – 2	470/10V	100/10V
C1505	G – 5	–	0.1
C1509	K – 2	–	10
C1516	I – 11	0.022	–
CN304	L – 9	–	6P
D509	J – 3	–	MA110
D520	E – 3	MA151WK	–
D537	J – 10	–	MA157
D541	E – 4	–	MA151WK
IC506	G – 3	–	MC14538BF
IC510	G – 3	–	MC14538BF
Q504	H – 4	2SC2412K	–
Q509	J – 3	–	DTA144EK
Q514	B – 9	–	DTC124EK
Q518	D – 10	–	DTC144EK
R526	I – 4	–	47K
R527	J – 6	–	47K
R536	H – 3	–	150K
R537	H – 3	–	47K
R538	H – 4	15K	–
R557	G – 3	22K	–
R566	F – 3	–	27K
R1534	A – 9	–	2.2K
R1548	G – 5	–	2.2K
R1552	H – 3	1K	56K
R1553	H – 3	–	56K
R1568	J – 2	–	22K
R1569	J – 2	–	10K
R1570	E – 4	–	10K
R1571	G – 5	–	180K
R1572	G – 5	–	150K
R1573	G – 5	–	10K

–: NOT MOUNT

A BOARD IC

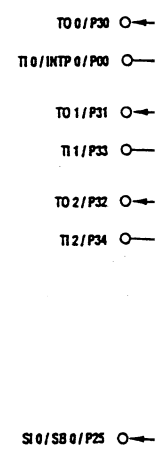

FORMS

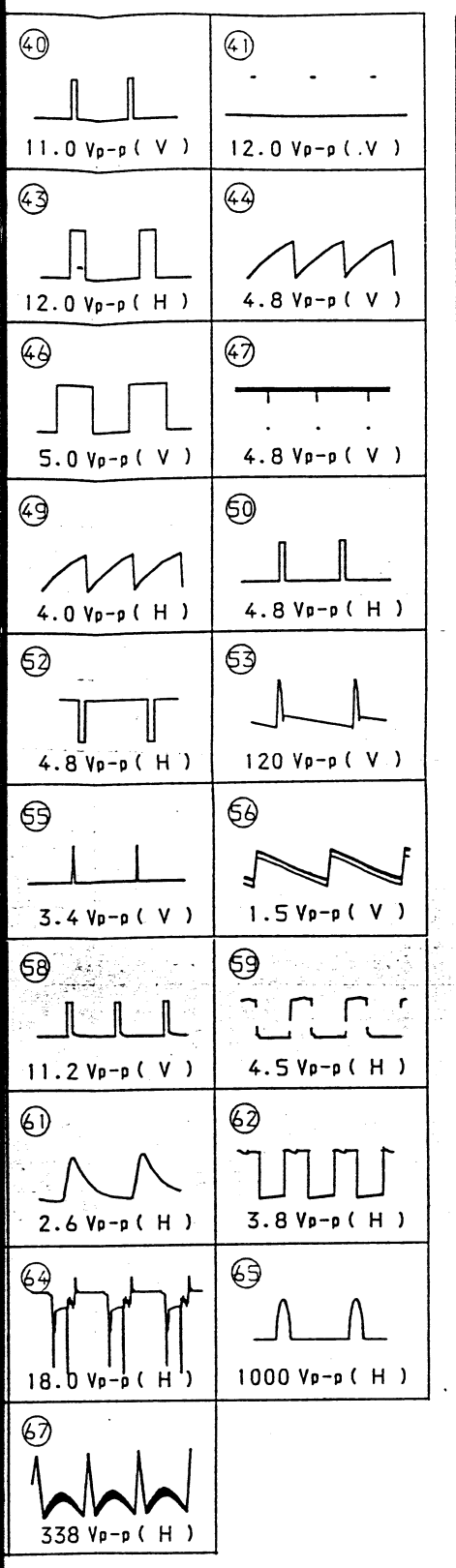

A BOARD

D101	PROTECT
D102	PROTECT
D103	OSP POSITION ADJ
D104	PROTECT
D105	PROTECT
D107	PROTECT
D109	MUTE
D110	MUTE SW
D111	PROTECT
D112	MUTE
D113	D. C. SHIFT
D114	SW
D115	PROTECT
D200	AUDIO D. C. REF
D300	PHASE ADJ
D301	SW
D302	D. C. SHIFT
D303	SECAM SW
D304	SW
D305	PROTECT
D306	SW
D307	B/W-SW
D309	B/W-SW
D310	CLAMP
D311	XTAL ADJ
D313	SW
D314	SLICE
D315	7.5 OPSW
D317	LEVEL-SHIFT
D318	PROTECT
D319	PROTECT
D320	SLICE
D322	SLICE
D323	SW
D324	R-Y COLOR BALANCE ADJ
D325	SW
D326	B-Y COLOR BALANCE ADJ
D327	SW
D332	RGB COMP SW
D333	SW
D335	SW
D336	SW
D337	SECAM-SW
D338	SW
D339	SW
D341	D. C.SHIFT
D344	SW
D345	OSD G CLAMP
D346	OSD B CLAMP
D347	OSD R CLAMP
D348	PROTECT
D349	PROTECT
D350	PROTECT
D351	PROTECT
D352	PROTECT
D353	PROTECT
D354	PROTECT
D355	PROTECT
D360	SW
D361	SW
D362	D. C. SHIFT
D363	D. C. SHIFT
D364	SW
D365	SECAM SW
D380	SW
D381	SW
D401	SW 15
D404	SW
D405	BLANKING
D406	SW SLICE

D407	RGB SW
D408	BLANKING
D410	SW
D411	SW
D413	SW
D414	OSD MODE SW
D415	OSD BLK-INSERT
D416	OSD B MIX
D417	OSD G MIX
D418	OSD R MIX
D421	SW
D422	SW
D423	CLAMP
D424	PROTECT
D425	CLAMP
D426	D. C. SHIFET
D427	PROTECT
D500	SPEED UP
D501	HV. PROTECT
D502	PIN DAMPER 1
D503	PROTECT
D504	PROTECT
D505	G2 RECT
D506	DAMPER
D507	HD-DELAY SW
D508	HV-DELAY SW
D509	SW
D510	+ 15V-RECT
D512	PIN-DAMPER 2
D513	H. BLK
D514	+ 24V-RECT
D515	+ 170V-RECT
D516	H. BLK
D517	SW
D518	PROTECT
D519	V. SYNC
D520	MICOM V SW
D522	D. C. UP
D523	BIAS
D524	H. CENT
D525	H. CENT
D526	50 / 60 SW
D527	D. C. LIMITTER
D528	POMP-OP2
D529	SW
D530	POMP-OP1
D531	12V REF 1
D532	12V REF 2
D533	PROTECT RECT
D534	SW
D535	BIAS
D536	BIAS
D537	PROTECT
D538	PROTECT
D239	SW
D540	V-BLK SW 1
D541	V-BLK SW 2
IC101	MICOM
IC102	ECPROM
IC103	EX-OR
IC104	ON SCREEN DISPLAY
IC105	DAC 1
IC106	DAC 2
IC107	DAC 4
IC108	MICOM RESET

IC109	DAC 5
IC110	DAC 3
IC111	EXP-OUT-PORI
IC200	AUDIO-OUT
IC301	ACC OFF. GAIN-CONT. AMP
IC302	PAL-60-ID2
IC303	SECAM DECOHER
IC304	SYSTEM-SW
IC305	CHOROMA-DEMOD
IC306	G/Y-SW
IC309	R/R-Y-SW
IC310	BLACK-INSERT
IC311	SAMPLE
IC312	B/B-Y-SW
IC313	SYNC SELECT
IC314	Y-SW
IC315	PULSE SELECT
IC316	SECAM CHOROMA SELECT
IC317	H-PULSC-GATE
IC318	NOT-GATE
IC320	CHROMA BPF SELECT
IC321	Y- D. L. -SW
IC322	G/Y SW SELECT
IC323	B/B-Y SW SELECT
IC324	R/R-Y SW SELECT
IC325I	AUDIO SELECT
IC326	HOLD AMP
IC350	BUFFER AMP
IC401	BLUE-ONCK GAIN-CONT AMP
IC402	R-Y GAIN-CONT AMP
IC403	BLACK-SAMPLING
IC404	RGB-MATRIX
IC405	BL-ONLY-SW 1
IC406	HOLD 2
IC407	H-BLK-SW 2
IC408	EDGE DETECT
IC409	ON/OFF-MUTE
IC410	SIG SECECT
IC411	COUNTER
IC412	VOL OFF SW 4
IC413	VOL OFF SW 2
IC502	V-DELAY MONO-MULTI
IC503	H-DELAY MONO-MULTI
IC504	V GAIN-CONT AMP 2
IC505	+ 12V REG
IC506	H-BLK MONO-MULTI
IC507	DIFRECTION
IC508	V GAIN-CONT AMP 1
IC509	PIN-COM
IC510	16 : 9 V-BLK MON-MULTI
Q101	V-BLK BUFFER
Q102	R-Y C/B BUFFER
Q103	B-Y C/B BUFFER
Q104	TALCY SW
Q105	U/S SW
Q107	RGB COMP
Q108	V SHORT SW
Q109	BLOS ONLY SW
Q110	MUTE BUFFER
Q111	HV-DC SW
Q112	MUTE BUFFER
Q113	DGC SW
Q200	12V-REG
Q201	MUTE SW
Q300	PHASE SHIFT
Q301	SYNC-CHIP CLAMP 1

Q302	BUFFER
Q303	VIDEO-IN-BUFF-1
Q304	VIDEO-IN-BUFF-2
Q305	CLAMP-BUFF-1
Q306	PAL TRAP BUFFER 1
Q307	SYNC-CHIP-CLAMP 2
Q308	CLAMP-RE 1
Q309	CLAMP-BUFF-2
Q310	PAL TRAP BUFFER 2
Q311	SLICER 2
Q312	AMP-1
Q313	AMP-2
Q314	SECAA SW
Q315	BUFF
Q316	NT-COMB-D.C.-REF
Q318	SYNC-SEF
Q319	Y-SW-BUFF
Q321	B/W-SW 2
Q323	PAL SW
Q324	PAL SW
Q325	SYNC-SIG-BUFF
Q326	Y-AMP-1
Q327	Y-AMP-2
Q328	443 SW
Q329	358 SW
Q330	R-Y-BUFF 1
Q331	B-Y-BUFF 1
Q332	358 SW
Q333	SYNC-BUFF
Q334	BELL-FIL BUFFER
Q335	HV-DOUAY SW
Q336	ID SW
Q337	BELL-FIL BUFFER
Q338	V-SYNC SSP 1
Q339	V-SYNC SSP 2
Q341	G/Y BUFFER
Q342	R/R-Y BUFFER
Q343	B/B-Y BUFFER
Q345	MUTE SW
Q346	ID SW
Q347	SECAM SW
Q348	R-Y BUFFER
Q349	B-Y BUFFER
Q350	INSERT-PULSE-SW
Q351	G/Y-BUFF-2
Q352	R/R-Y-BUFF-2
Q353	B/B-Y-BUFF-2
Q354	B/W-SW2
Q355	258 TRIP SW
Q356	MUTE SW
Q357	ACC OFF AMP
Q358	ACC OFF SW
Q359	ACC ON SW
Q360	HOLD
Q361	EXT-SYNC SW
Q362	OSD SW
Q363	TEST BUFFER
Q364	V-PULSU SW
Q365	MUTE SW
Q366	BRIGHT UP SW 1
Q367	BRIGHT UP SW 2
Q368	BRIGHT UP SW 3
Q369	RGB SW
Q372	RGB SW
Q373	RGB MODE SW
Q374	RGB MODE SW
Q375	RGB MODE SW
Q376	MUTE SW
Q377	DIGITAL MODE SW 1
Q378	DIGITAL MODE SW 2

Q401	BRIGHT ABL
Q402	PIY ABL
Q403	V-BLK-SW
Q404	B/O G AMP 9
Q405	B-BUFF 3
Q406	B/O G AMP 2
Q407	B/W-SW3
Q408	B/O R AMP 1
Q409	B-Y-BUFF
Q410	Y BUFFER
Q411	B/O R AMP 2
Q412	BCH BOFFER
Q413	BCH NORMAL SW
Q414	R BUFFER
Q415	G BUFFER
Q416	B BUFFER
Q417	B-BUFF
Q418	OFF-MUTE-SW
Q419	G-BUFF 3
Q420	R BUFF 3
Q421	V-BLK-SW 1
Q422	BLANKING
Q423	BLUE BUFFER
Q424	BLK
Q425	V-P BUFFER 1
Q426	V-P BUFFER 2
Q428	SMARPESS BUFFER
Q429	IK BUFFER
Q430	IK BLK
Q431	RESET MUTE SW
Q432	BRIGHT MUTE SW
Q433	RGB SW
Q434	MUTE RGB SW
Q435	OSD DOWN SW
Q436	OSD DOWN SW
Q437	OSD DOWN SW
Q438	BLUE ONLY SW
Q439	BCH B/O DLY-EQ 1
Q440	BCH B/O DLY-EQ 2
Q441	BCH B/O SW
Q442	BCH BUFFER
Q443	AUTO CMROMA SET UP AMP 1
Q444	AUTO CMROMA SET UP AMP 2
Q445	BLUE ONLY SW
Q500	CURR-LIN 2
Q501	H-OUT
Q502	H-DRIVE
Q503	PIN-OUT
Q505	H. BLK 1
Q506	V. ZOOMING
Q507	H. BLK2T1
Q508	50/60 SW
Q509	DIGITAL V SW
Q511	CURR-LIM 1
Q512	V-DRIVE
Q513	V. OUT 1
Q514	50/60 SW
Q515	V. OUT 2
Q517	H-V PHASE LOCK SW
Q518	U/S SW 1
Q519	U/S SW 2
Q520	12V REG
Q522	H. P. BUFFER
Q523	V-CENT CONT
Q524	V-CENT OUT 2
Q525	V-CENT OUT 1
Q526	FBT-12V FAILURE SW
Q527	C528 FAILURE SW

A BOARD IC101 μPD78012YCW

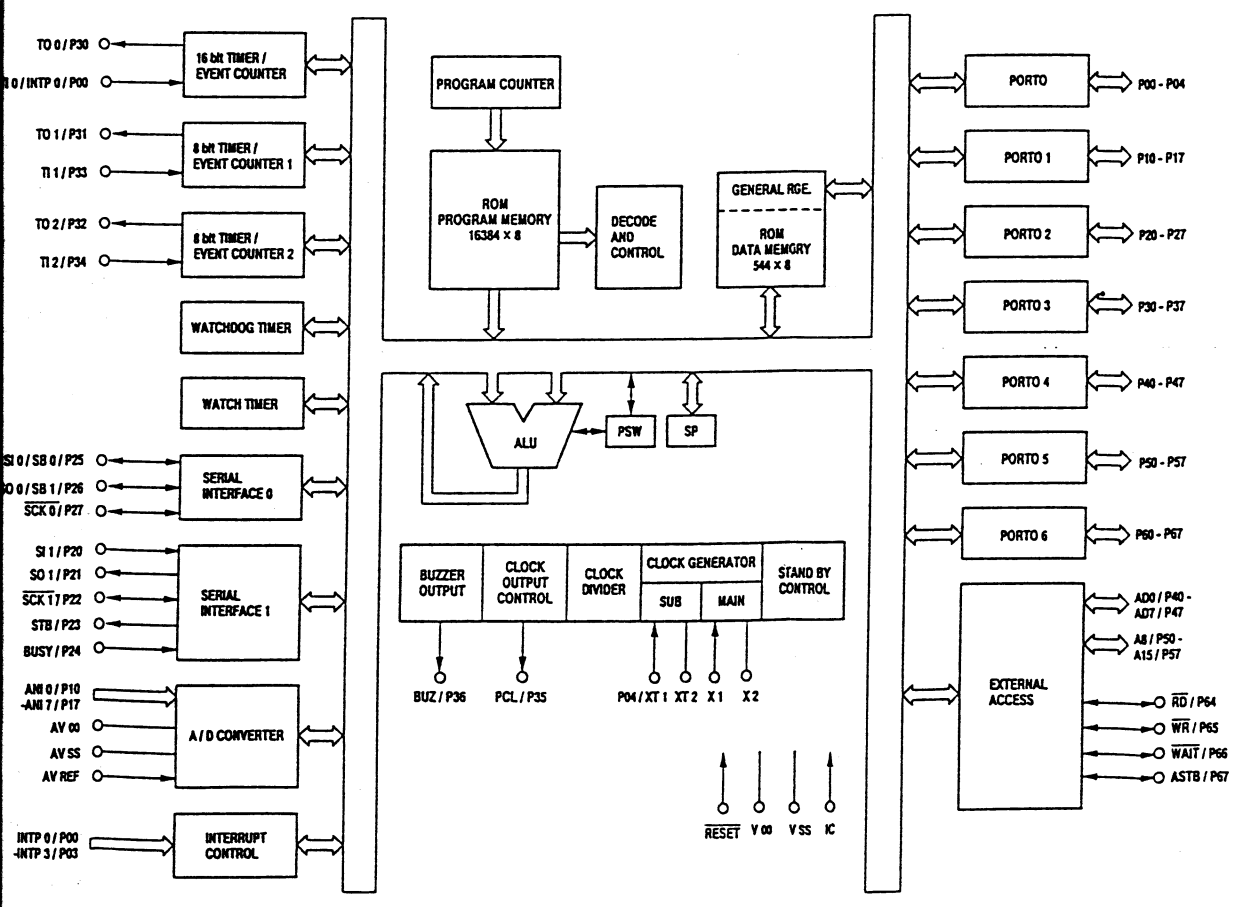

A BOARD IC200 AN5265

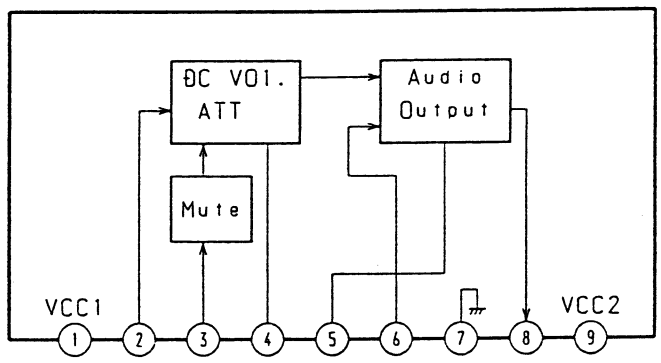

A BOARD IC404 CXA1478

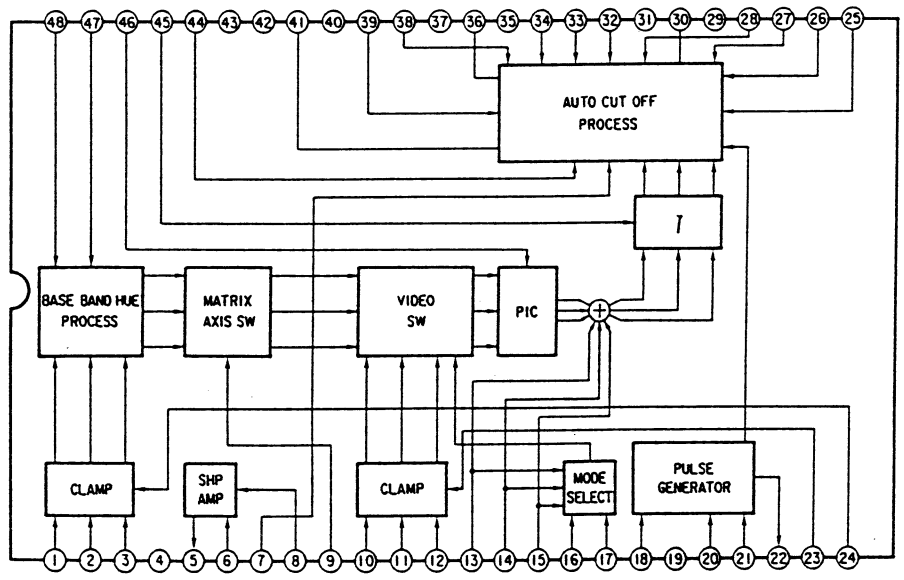

Schematic diagram
← A (3/3) board

Schematic diagrams
G H J boards →
Q X S

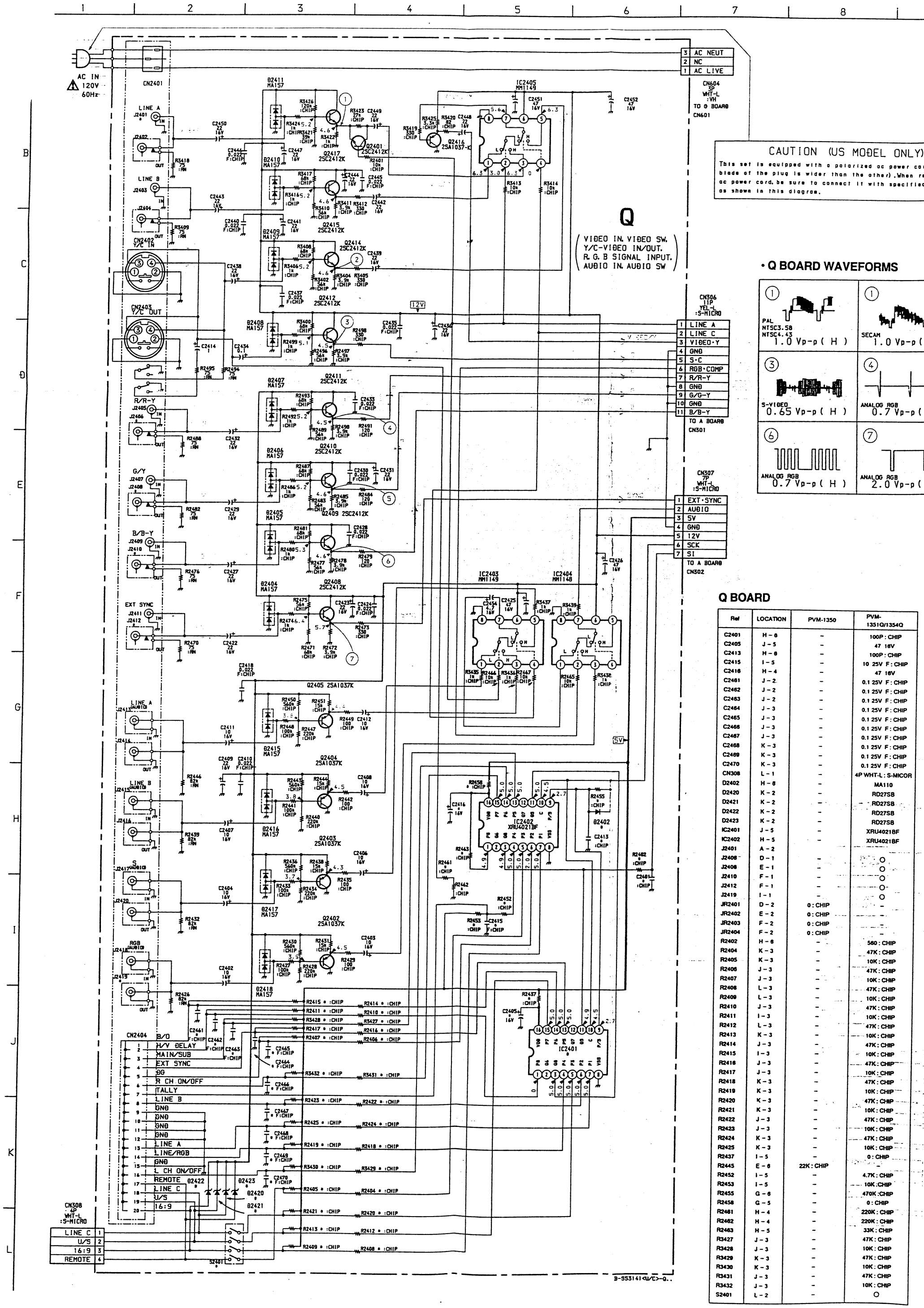

CAUTION (US MODEL ONLY)

This set is equipped with a polarized ac power cor blade of the plug is wider than the other). When re ac power cord, be sure to connect it with specified as shown in this diagram.

• Q BOARD WAVEFORMS

Q BOARD

Ref	LOCATION	PVM-1350	PVM-1351Q/1354Q
C2401	H - 6	-	100P : CHIP
C2405	J - 5	-	47 16V
C2413	H - 6	-	100P : CHIP
C2415	I - 5	-	10 25V F : CHIP
C2416	H - 4	-	47 16V
C2461	J - 2	-	0.1 25V F : CHIP
C2462	J - 2	-	0.1 25V F : CHIP
C2463	J - 2	-	0.1 25V F : CHIP
C2464	J - 3	-	0.1 25V F : CHIP
C2465	J - 3	-	0.1 25V F : CHIP
C2466	J - 3	-	0.1 25V F : CHIP
C2467	J - 3	-	0.1 25V F : CHIP
C2468	K - 3	-	0.1 25V F : CHIP
C2469	K - 3	-	0.1 25V F : CHIP
C2470	K - 3	-	0.1 25V F : CHIP
CN308	L - 1	-	4P WHT-L : S-MICOR
D2402	H - 6	-	MA110
D2420	K - 2	-	RD27SB
D2421	K - 2	-	RD27SB
D2422	K - 2	-	RD27SB
D2423	K - 2	-	RD27SB
IC2401	J - 5	-	XRU4021BF
IC2402	H - 5	-	XRU4021BF
J2401	A - 2		
J2406	D - 1	-	O
J2408	E - 1	-	O
J2410	F - 1	-	O
J2412	F - 1	-	O
J2419	I - 1	-	O
JR2401	D - 2	0 : CHIP	-
JR2402	E - 2	0 : CHIP	-
JR2403	F - 2	0 : CHIP	-
JR2404	F - 2	0 : CHIP	-
R2402	H - 6	-	560 : CHIP
R2404	K - 3	-	47K : CHIP
R2405	K - 3	-	10K : CHIP
R2406	J - 3	-	47K : CHIP
R2407	J - 3	-	10K : CHIP
R2408	L - 3	-	47K : CHIP
R2409	L - 3	-	10K : CHIP
R2410	J - 3	-	47K : CHIP
R2411	I - 3	-	10K : CHIP
R2412	L - 3	-	47K : CHIP
R2413	K - 3	-	10K : CHIP
R2414	J - 3	-	47K : CHIP
R2415	I - 3	-	10K : CHIP
R2416	J - 3	-	47K : CHIP
R2417	J - 3	-	10K : CHIP
R2418	K - 3	-	47K : CHIP
R2419	K - 3	-	10K : CHIP
R2420	K - 3	-	47K : CHIP
R2421	K - 3	-	10K : CHIP
R2422	J - 3	-	47K : CHIP
R2423	J - 3	-	10K : CHIP
R2424	K - 3	-	47K : CHIP
R2425	K - 3	-	10K : CHIP
R2437	I - 5	-	0 : CHIP
R2445	E - 6	22K : CHIP	-
R2452	I - 5	-	4.7K : CHIP
R2453	I - 5	-	10K :CHIP
R2455	G - 6	-	470K :CHIP
R2458	G - 5	-	0 : CHIP
R2461	H - 4	-	220K : CHIP
R2462	H - 4	-	220K : CHIP
R2463	H - 5	-	33K : CHIP
R3427	J - 3	-	47K : CHIP
R3428	J - 3	-	10K : CHIP
R3429	K - 3	-	47K : CHIP
R3430	K - 3	-	10K : CHIP
R3431	J - 3	-	47K : CHIP
R3432	J - 3	-	10K : CHIP
S2401	L - 2	-	O

O:TO BE MOUNT
- : NOT MOUNT

MODEL ONLY)
ized ac power cord plug (one
he other). When replacing the
it with specified part number

EFORMS

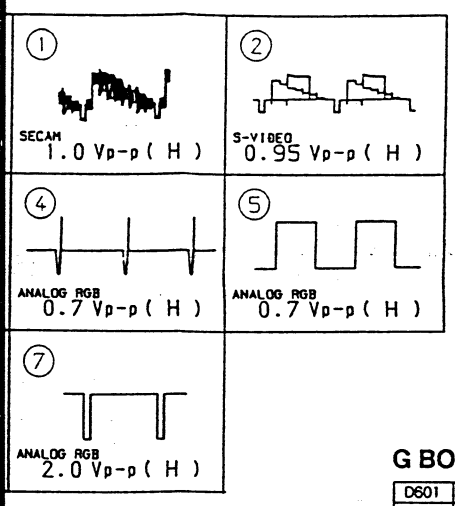

PVM-1351Q/1354Q
100P : CHIP
47 16V
100P : CHIP
10 25V F : CHIP
47 16V
0.1 25V F : CHIP
0.1 25V F : CHIP
0.1 25V F : CHIP
0.1 25V F : CHIP
0.1 25V F : CHIP
0.1 25V F : CHIP
0.1 25V F : CHIP
0.1 25V F : CHIP
0.1 25V F : CHIP
0.1 25V F : CHIP
4P WHT-L : S-MICOR
MA110
RD27SB
RD27SB
RD27SB
RD27SB
XRU4021BF
XRU4021BF
560 : CHIP
47K : CHIP
10K : CHIP
47K : CHIP
10K : CHIP
47K : CHIP
10K : CHIP
47K : CHIP
10K : CHIP
47K : CHIP
10K : CHIP
47K : CHIP
10K : CHIP
47K : CHIP
10K : CHIP
47K : CHIP
10K : CHIP
47K : CHIP
10K : CHIP
47K : CHIP
10K : CHIP
0 : CHIP
4.7K : CHIP
10K : CHIP
470K : CHIP
0 : CHIP
220K : CHIP
220K : CHIP
33K : CHIP
47K : CHIP
10K : CHIP
47K : CHIP
10K : CHIP
47K : CHIP
10K : CHIP
O

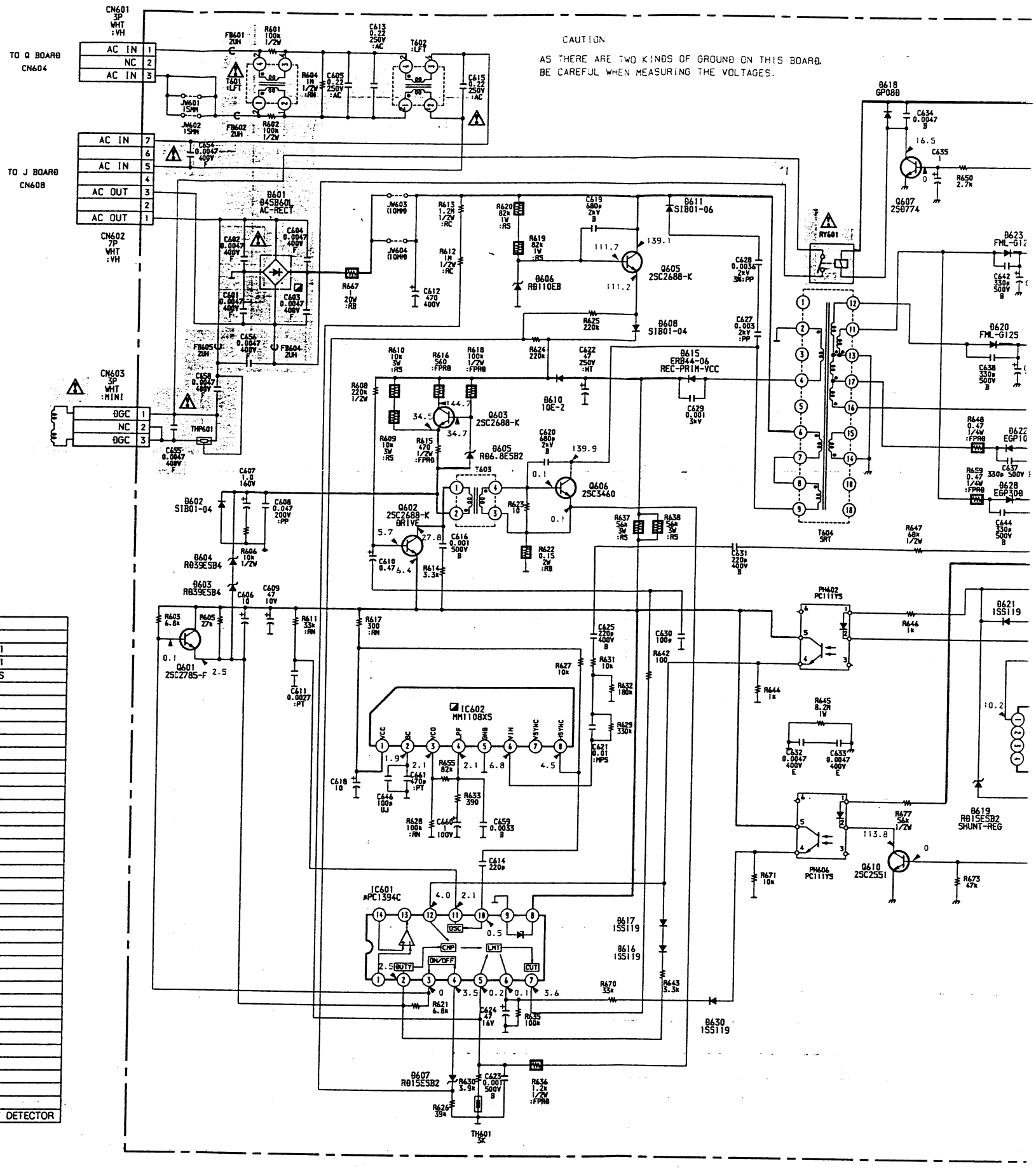

G BOARD

D601	AC-RECT
D602	PROT
D603	EX-VOL-PROT 1
D604	EX-VOL-PROT 1
D605	CURRENT-CONS
D606	KICK-VOLTAGE
D607	LOW-VOL
D608	KICK
D610	PRIM-VCC
D611	AC-CLIPPER
D615	REC-PRIM-VCC
D616	SOFT-START 1
D617	SOFT-START 2
D618	PROTECT
D619	SHUNT-REG
D620	15V-RECT
D621	PROTECTOR
D622	− 15V-RECT
D623	5V-RECT
D625	5V-RECT 2
D626	5V-RECT 1
D628	7V-RECT
D629	115V-RECT
D630	SW
D631	BIAS
IC601	REF-PWM
IC602	H-AFC
IC603	SHUNT-REG
Q601	RESET
Q602	DRIVE
Q603	CURRENT
Q605	STRAT
Q606	CONVERTER
Q607	DGC DRIVE
Q609	5V8 REG
Q610	FAILURE
Q611	OVER CURRENT DETECTOR

Q BOARD

D2402	SPEED UP
D2404	PROTECT
D2405	PROTECT
D2406	PROTECT
D2407	PROTECT
D2408	PROTECT
D2409	PROTECT
D2410	PROTECT
D2411	PROTECT
D2415	PROTECT
D2416	PROTECT
D2417	PROTECT
D2418	PROTECT
D2420	PROTECT
D2421	PROTECT
D2422	PROTECT
D2423	PROTECT
IC2401	SHIFT REGISTER
IC2402	SHIFT REGISTER
IC2403	AUDIO SW
IC2404	AUDIO SW
IC2405	VIDEO SW
Q2402	(A . RGB . BUFFER)
Q2403	(A . S . BUFFER)
Q2404	(A . B . BUFFER)
Q2405	(A . A . BUFFER)
Q2408	(S . B . BUFFER)
Q2409	(B . BUFFER)
Q2410	(G . BUFFER)
Q2411	(R . BUFFER)
Q2412	(C . BUFFER)
Q2414	(Y . BUFFER)
Q2415	(V . B . BUFFER)
Q2416	VIDEO IN BUFFER
Q2417	(V . A . BUFFER)
Q2418	16 : 5 COIET

G BOARD IC602 MM1108XS

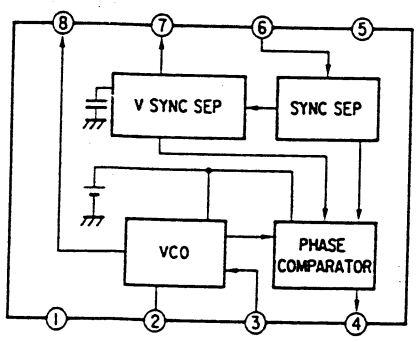

S BOARD IC801 Z8612812PSC

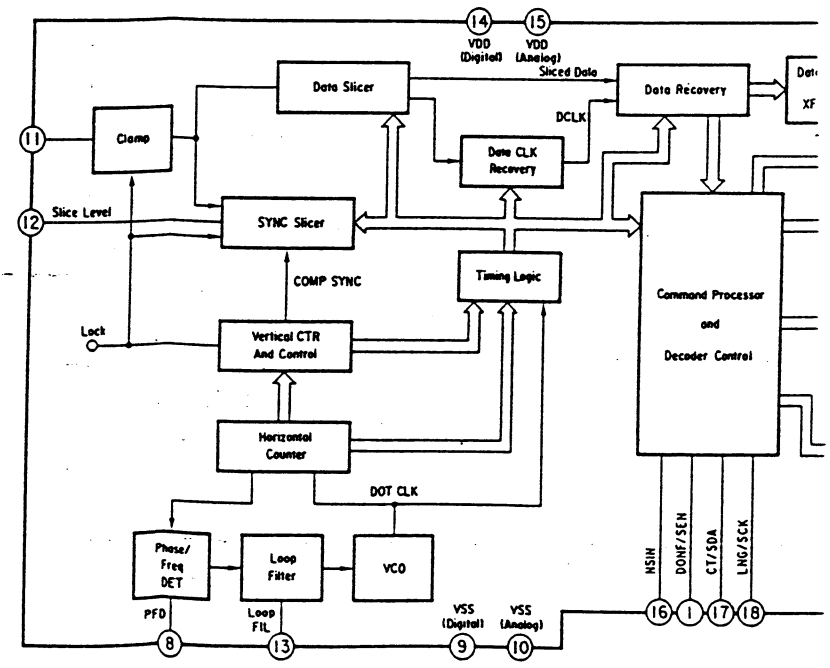

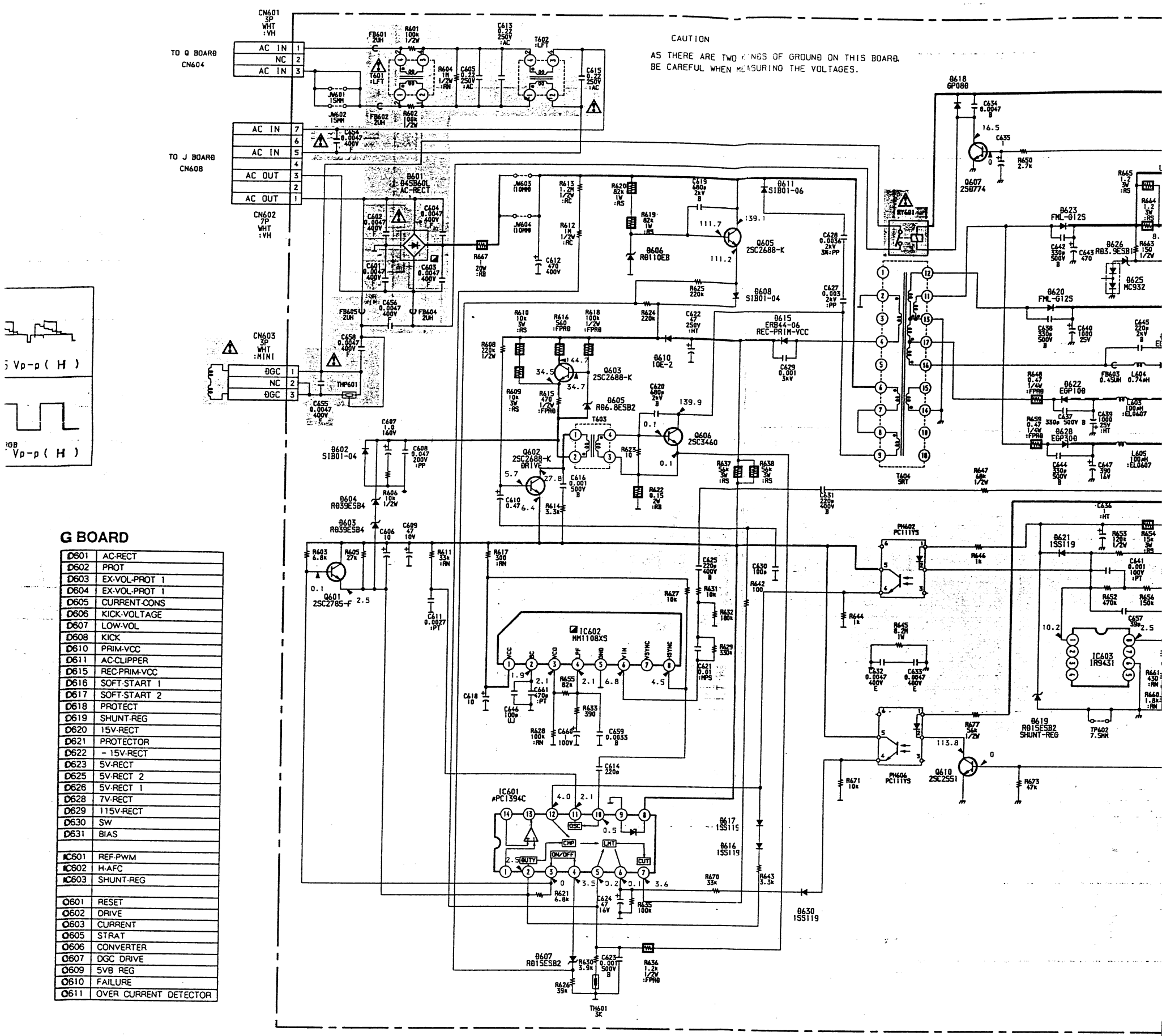

G BOARD

D601	AC-RECT
D602	PROT
D603	EX-VOL-PROT 1
D604	EX-VOL-PROT 1
D605	CURRENT-CONS
D606	KICK-VOLTAGE
D607	LOW-VOL
D608	KICK
D610	PRIM-VCC
D611	AC-CLIPPER
D615	REC-PRIM-VCC
D616	SOFT-START 1
D617	SOFT-START 2
D618	PROTECT
D619	SHUNT-REG
D620	15V-RECT
D621	PROTECTOR
D622	- 15V-RECT
D623	5V-RECT
D625	5V-RECT 2
D626	5V-RECT 1
D628	7V-RECT
D629	115V-RECT
D630	SW
D631	BIAS
IC601	REF-PWM
IC602	H-AFC
IC603	SHUNT-REG
Q601	RESET
Q602	DRIVE
Q603	CURRENT
Q605	STRAT
Q606	CONVERTER
Q607	DGC DRIVE
Q609	5VB REG
Q610	FAILURE
Q611	OVER CURRENT DETECTOR

D

SPEED UP
PROTECT
PROTECT
PROTECT
PROTECT
PROTECT
PROTECT
PROTECT
PROTECT
PROTECT
PROTECT
PROTECT
PROTECT
PROTECT
PROTECT
PROTECT
PROTECT
PROTECT
SHIFT REGISTER
SHIFT REGISTER
AUDIO SW
AUDIO SW
VIDEO SW
(A . RGB . BUFFER)
(A . S . BUFFER)
(A . B . BUFFER)
(A . A . BUFFER)
(S . B . BUFFER)
(B . BUFFER)
(G . BUFFER)
(R . BUFFER)
(C . BUFFER)
(Y . BUFFER)
(V . B . BUFFER)
VIDEO IN BUFFER
(V . A . BUFFER)
16 : 5 COIET

G BOARD IC602 MM1108XS

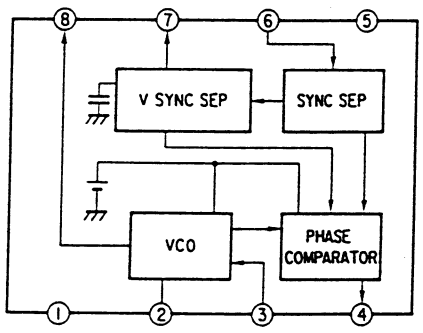

S BOARD IC801 Z8612812PSC

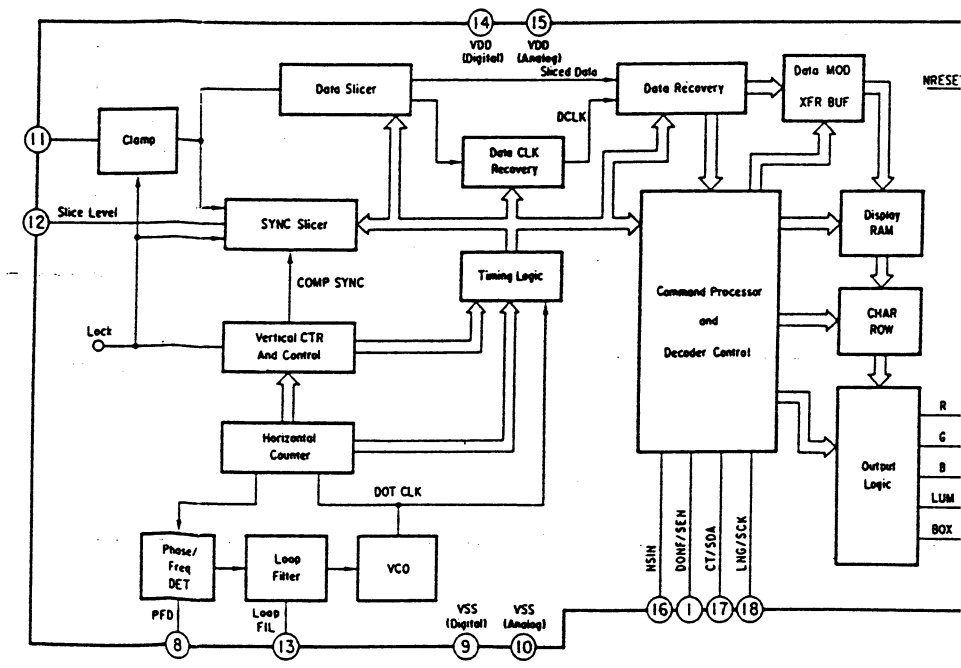

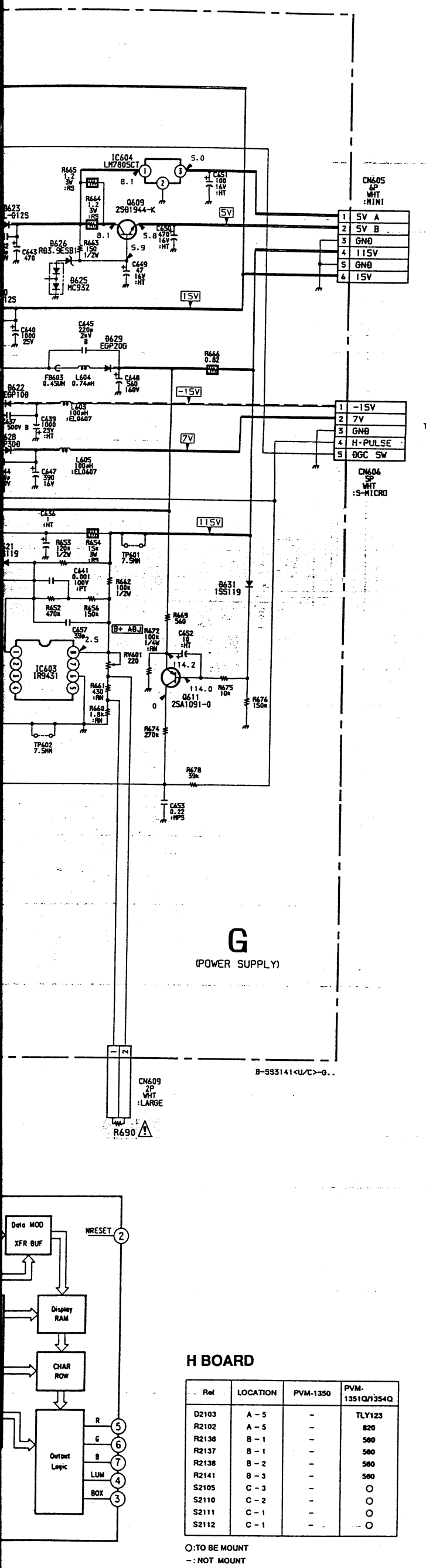

G
(POWER SUPPLY)

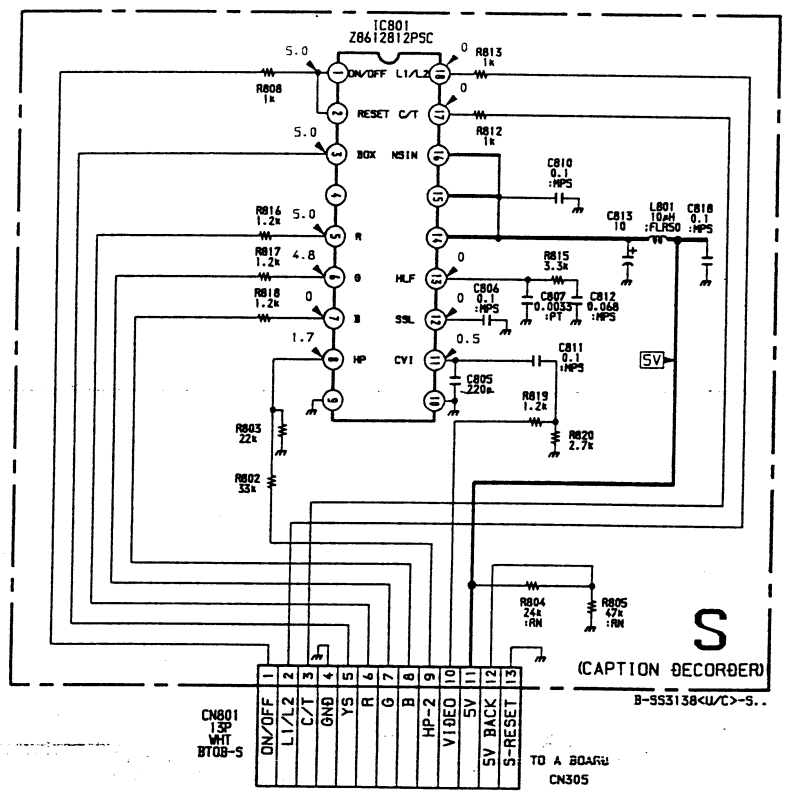

S
(CAPTION DECORDER)

S BOARD

IC801	CAPTION DECODER

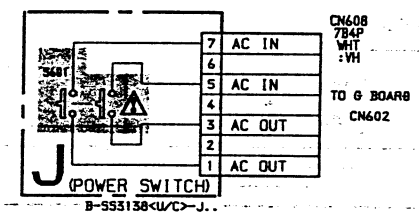

J
(POWER SWITCH)

(PVM-1351Q/1354Q only)

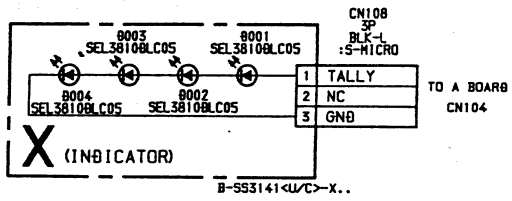

X
(INDICATOR)

X BOARD

D001	TALLY LED 1
D002	TALLY LED 2
D003	TALLY LED 3
D004	TALLY LED 4

H BOARD

Ref	LOCATION	PVM-1350	PVM-1351Q/1354Q
D2103	A - 5	-	TLY123
R2102	A - 5	-	820
R2136	B - 1	-	560
R2137	B - 1	-	560
R2138	B - 2	-	560
R2141	B - 3	-	560
S2105	C - 3	-	O
S2110	C - 2	-	O
S2111	C - 1	-	O
S2112	C - 1	-	O

O:TO BE MOUNT
-: NOT MOUNT

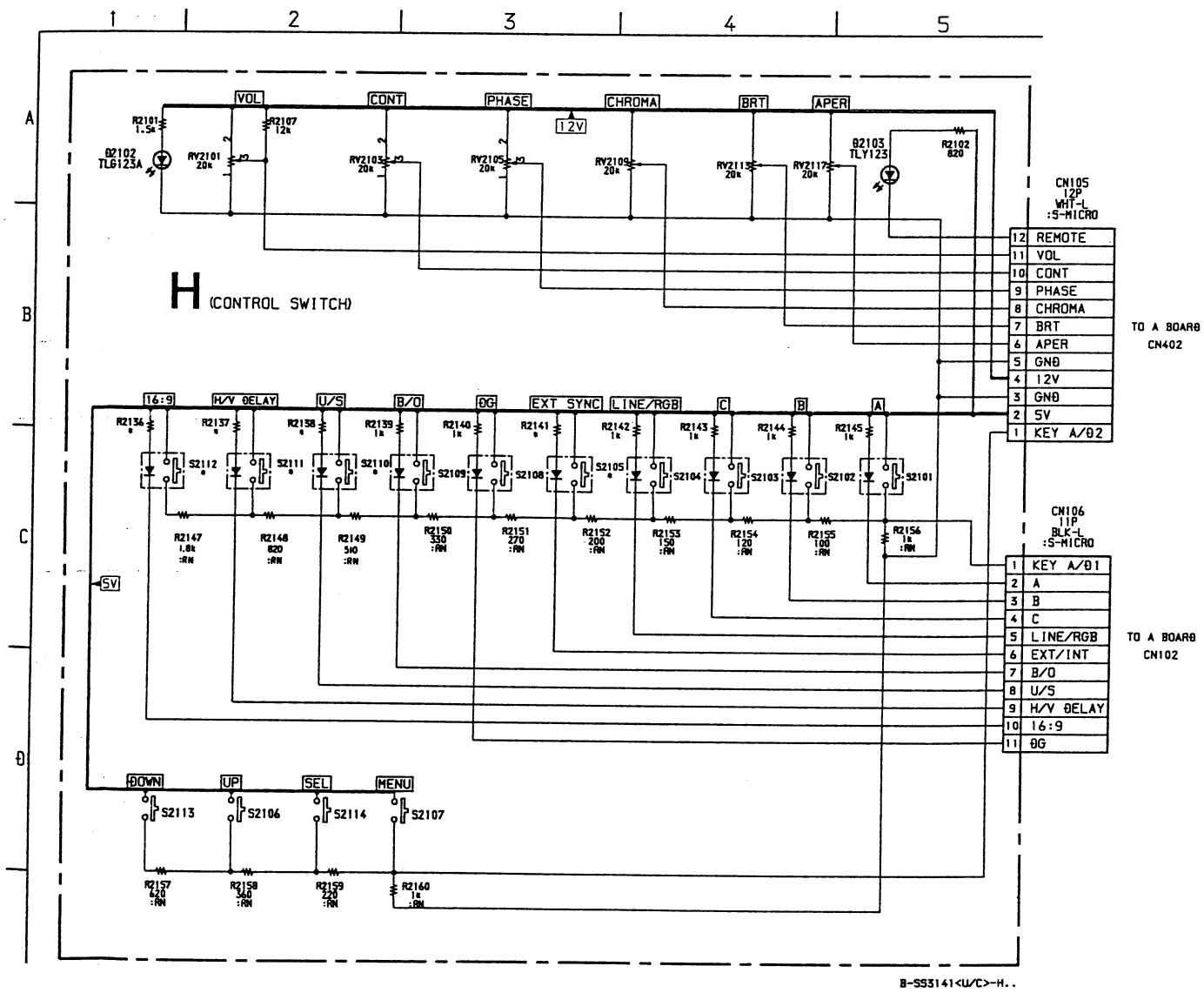

H
(CONTROL SWITCH)

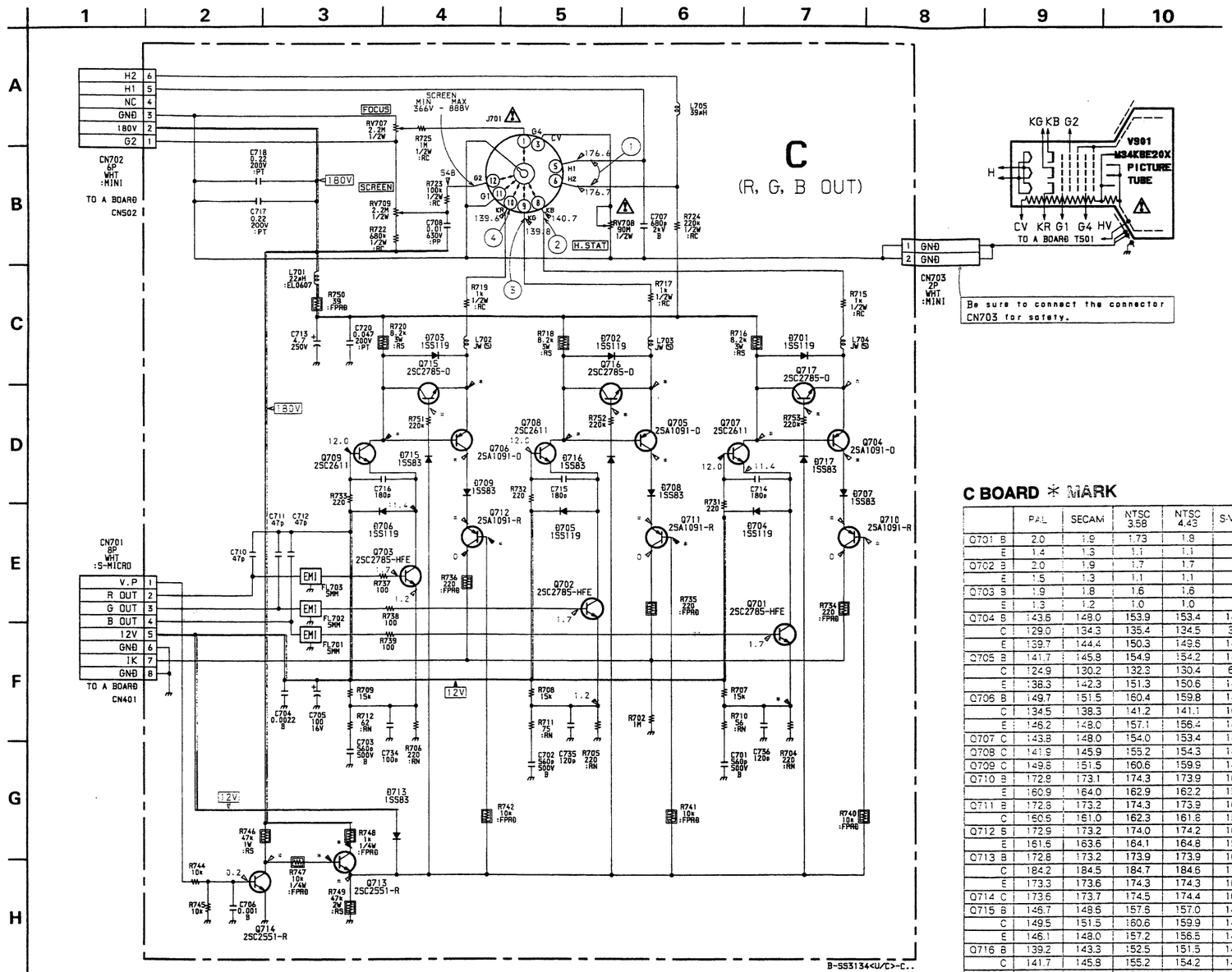

• C BOARD WAVEFORMS

① 23.0 Vp-p (H)	② SECAM 98.0 Vp-p (H) PAL 96.0 Vp-p (H)	② NTSC3.58 82.0 Vp-p (H) NTSC4.43 80.0 Vp-p (H)	② S-VIDEO 69.0 Vp-p (H) ANALOG RGB 88.0 Vp-p (H)	③ PAL 93.0 Vp-p (H) SECAM 89.0 Vp-p (H)
③ NTSC3.58 4.43 70.0 Vp-p (H)	③ S-VIDEO 78.0 Vp-p (H) ANALOG 102 Vp-p (H)	④ PAL 90.0 Vp-p (H) SECAM 89.0 Vp-p (H)	④ NTSC3.58 4.43 73.0 Vp-p (H)	④ S-VIDEO 78.0 Vp-p (H) ANALOG RGB 88.0 Vp-p (H)

C BOARD ✳ MARK

		PAL	SECAM	NTSC 3.58	NTSC 4.43	S-VIDEO	ANALOG RGB
Q701	B	2.0	1.9	1.73	1.8	1.8	2.0
	E	1.4	1.3	1.1	1.1	1.2	1.4
Q702	B	2.0	1.9	1.7	1.7	1.8	2.0
	E	1.5	1.3	1.1	1.1	1.2	1.4
Q703	B	1.9	1.8	1.6	1.6	1.8	1.9
	E	1.3	1.2	1.0	1.0	1.2	1.3
Q704	B	143.6	148.0	153.9	153.4	144.9	143.8
	C	129.0	134.3	135.4	134.5	31.2	111.5
	E	139.7	144.4	150.3	149.6	140.4	140.1
Q705	B	141.7	145.8	154.9	154.2	145.0	141.8
	C	124.9	130.2	132.3	130.4	60.4	106.6
	E	138.3	142.3	151.3	150.6	140.7	138.5
Q706	B	149.7	151.5	160.4	159.8	144.9	148.6
	C	134.5	138.3	141.2	141.1	103.2	114.7
	E	146.2	148.0	157.1	156.4	140.8	145.0
Q707	C	143.8	148.0	154.0	153.4	144.9	143.7
Q708	C	141.9	145.9	155.2	154.3	145.0	141.8
Q709	C	149.6	151.5	160.6	159.9	144.9	148.5
Q710	B	172.9	173.1	174.3	173.9	167.0	173.5
	E	160.9	164.0	162.9	162.2	154.0	161.2
Q711	B	172.8	173.2	174.3	173.9	167.0	173.5
	C	160.5	161.0	162.3	161.6	154.1	161.3
Q712	B	172.9	173.2	174.0	174.2	167.0	173.5
	E	161.6	163.6	164.1	164.8	154.5	161.4
Q713	B	172.8	173.2	173.9	173.9	166.8	173.5
	C	184.2	184.5	184.7	184.6	176.6	183.8
	E	173.3	173.6	174.3	174.3	167.2	173.9
Q714	C	173.6	173.7	174.5	174.4	167.4	174.1
Q715	B	146.7	148.6	157.6	157.0	140.3	145.7
	C	149.5	151.5	160.6	159.9	144.9	148.5
	E	146.1	148.0	157.2	156.5	140.7	145.0
Q716	B	139.2	143.3	152.5	151.5	140.7	139.4
	C	141.7	145.8	155.2	154.2	145.1	141.8
	E	138.2	142.3	151.4	150.5	140.6	138.4
Q717	B	140.9	145.4	151.7	150.8	140.6	141.2
	C	143.6	148.0	154.1	153.4	144.9	143.8
	E	139.8	144.4	150.5	149.6	140.4	140.0

D701	PROTECT 1
D702	PROTECT 2
D703	PROTECT 3
D704	PROTECT 4
D705	PROTECT 5
D706	PROTECT 6
D707	PROTECT 7
D708	PROTECT 8
D709	PROTECT 9
D713	PROTECT 10
D715	PROTECT 11
D716	PROTECT 12
D717	PROTECT 13
Q701	B DRIVE
Q702	G DRIVE
Q703	R DRIVE
Q704	B BUFF
Q705	G BUFF
Q706	R BUFF
Q707	B OUT
Q708	G OUT
Q709	R OUT
Q710	IK SW 1
Q711	IK SW 2
Q712	IK SW 3
Q713	V. BLK OUT
Q714	V. BLK INT
Q715	TRACE SW 1
Q716	TRACE SW 2
Q717	TRACE SW 3

G [POWER SUPPLY] Q [VIDEO IN, R. G. B SIG

– G BOARD –

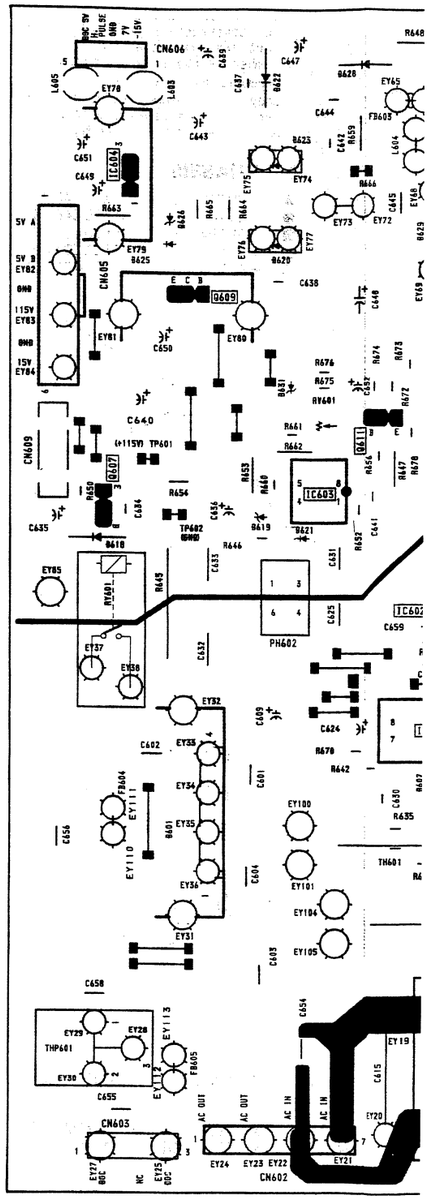

9 | 10

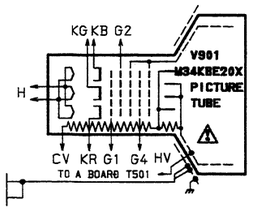

sure to connect the connector
703 for safety.

BOARD * MARK

		PAL	SECAM	NTSC 3.58	NTSC 4.43	S-VIDEO	ANALOG RGB
701	B	2.0	1.9	1.73	1.8	1.8	2.0
	E	1.4	1.3	1.1	1.1	1.2	1.4
702	B	2.0	1.9	1.7	1.7	1.8	2.0
	E	1.5	1.3	1.1	1.1	1.2	1.4
703	B	1.9	1.8	1.6	1.6	1.8	1.9
	E	1.3	1.2	1.0	1.0	1.2	1.3
704	B	143.6	148.0	153.9	153.4	144.9	143.8
	C	129.0	134.3	135.4	134.5	31.2	111.5
	E	139.7	144.4	150.3	149.6	140.4	140.1
705	B	141.7	145.8	154.9	154.2	145.0	141.8
	C	124.9	130.2	132.3	130.4	60.4	106.6
	E	138.3	142.3	151.3	150.6	140.7	138.5
706	B	149.7	151.5	160.4	159.8	144.9	148.6
	C	134.5	138.3	141.2	141.1	103.2	114.7
	E	146.2	148.0	157.1	156.4	140.8	145.0
707	C	143.8	148.0	154.0	153.4	144.9	143.7
708	C	141.9	145.9	155.2	154.3	145.0	141.8
709	C	149.8	151.5	160.6	159.9	144.9	148.5
710	B	172.8	173.1	174.3	173.9	167.0	173.5
	E	160.9	164.0	162.9	162.2	154.0	161.2
711	B	172.9	173.2	174.3	173.9	167.0	173.5
	C	160.6	161.0	162.3	161.8	154.1	161.3
712	B	172.9	173.2	174.0	174.2	167.0	173.5
	E	161.6	163.6	164.1	164.8	154.5	161.4
713	B	172.8	173.2	173.9	173.9	166.8	173.5
	C	184.2	184.5	184.7	184.6	176.6	183.8
	E	173.3	173.6	174.3	174.3	167.2	173.9
714	C	173.6	173.7	174.5	174.4	167.4	174.1
715	B	146.7	148.6	157.6	157.0	140.3	145.7
	C	149.5	151.5	160.6	159.9	144.9	148.5
	E	146.1	148.0	157.2	156.5	140.7	145.0
716	B	139.2	143.3	152.5	151.5	140.7	139.4
	C	141.7	145.8	155.2	154.2	145.1	141.8
	E	138.2	142.3	151.4	150.5	140.6	138.4
717	B	140.9	145.4	151.7	150.8	140.6	141.2
	C	143.6	148.0	154.1	153.4	144.9	143.8
	E	139.8	144.4	150.5	149.6	140.4	140.0

D701	PROTECT 1
D702	PROTECT 2
D703	PROTECT 3
D704	PROTECT 4
D705	PROTECT 5
D706	PROTECT 6
D707	PROTECT 7
D708	PROTECT 8
D709	PROTECT 9
D713	PROTECT 10
D715	PROTECT 11
D716	PROTECT 12
D717	PROTECT 13
Q701	B DRIVE
Q702	G DRIVE
Q703	R DRIVE
Q704	B BUFF
Q705	G BUFF
Q706	R BUFF
Q707	B OUT
Q708	G OUT
Q709	R OUT
Q710	IK SW 1
Q711	IK SW 2
Q712	IK SW 3
Q713	V. BLK OUT
Q714	V. BLK INT
Q715	TRACE SW 1
Q716	TRACE SW 2
Q717	TRACE SW 3

G [POWER SUPPLY] Q [VIDEO IN, VIDEO SW, Y/C-VIDEO IN/OUT, R. G. B SIGNAL INPUT, AUDIO IN, AUDIO SW] H [CONTROL SWITCH] X [INDICATOR] J [POWER SWITCH] C [R. G. B OUT] S

– G BOARD –

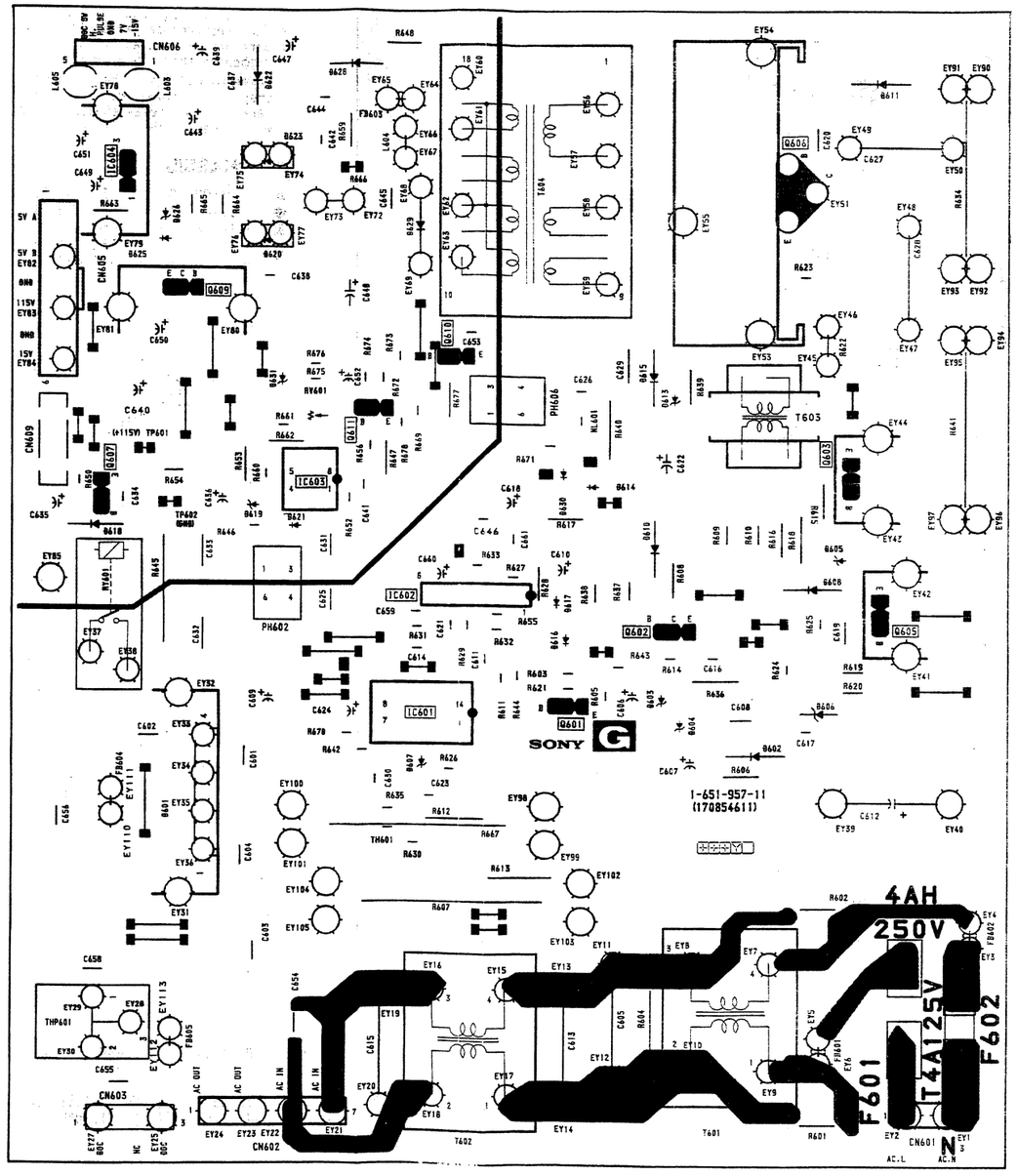

– Q BOARD –

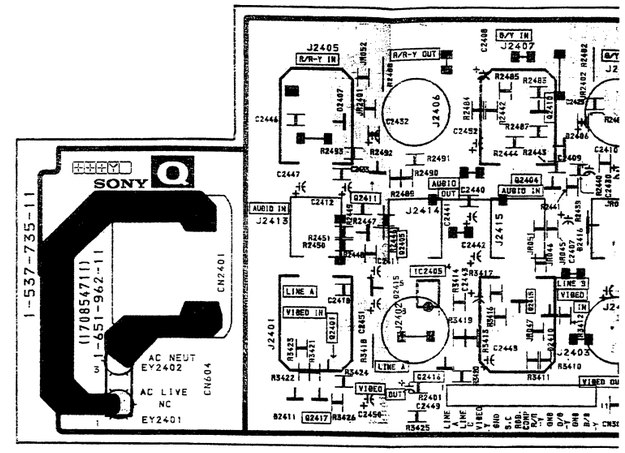

– H BOARD –

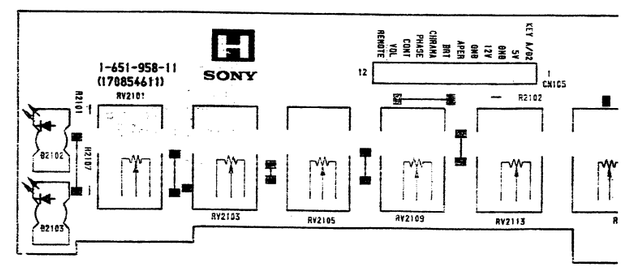

(PVM-1351Q/1354Q only)

– X BOARD –

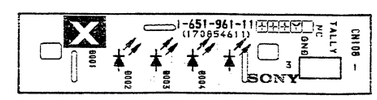

– J BOARD

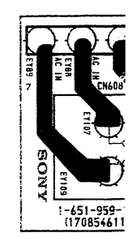

G [POWER SUPPLY] **Q** [VIDEO IN, VIDEO SW, Y/C-VIDEO IN/OUT, R. G. B SIGNAL INPUT, AUDIO IN, AUDIO SW] **H** [CONTROL SWITCH] **X** [INDICATOR] **J** [POWER SWITCH] **C** [R. G. B OUT] **S** [CAPTION DECORDER]

– G BOARD –

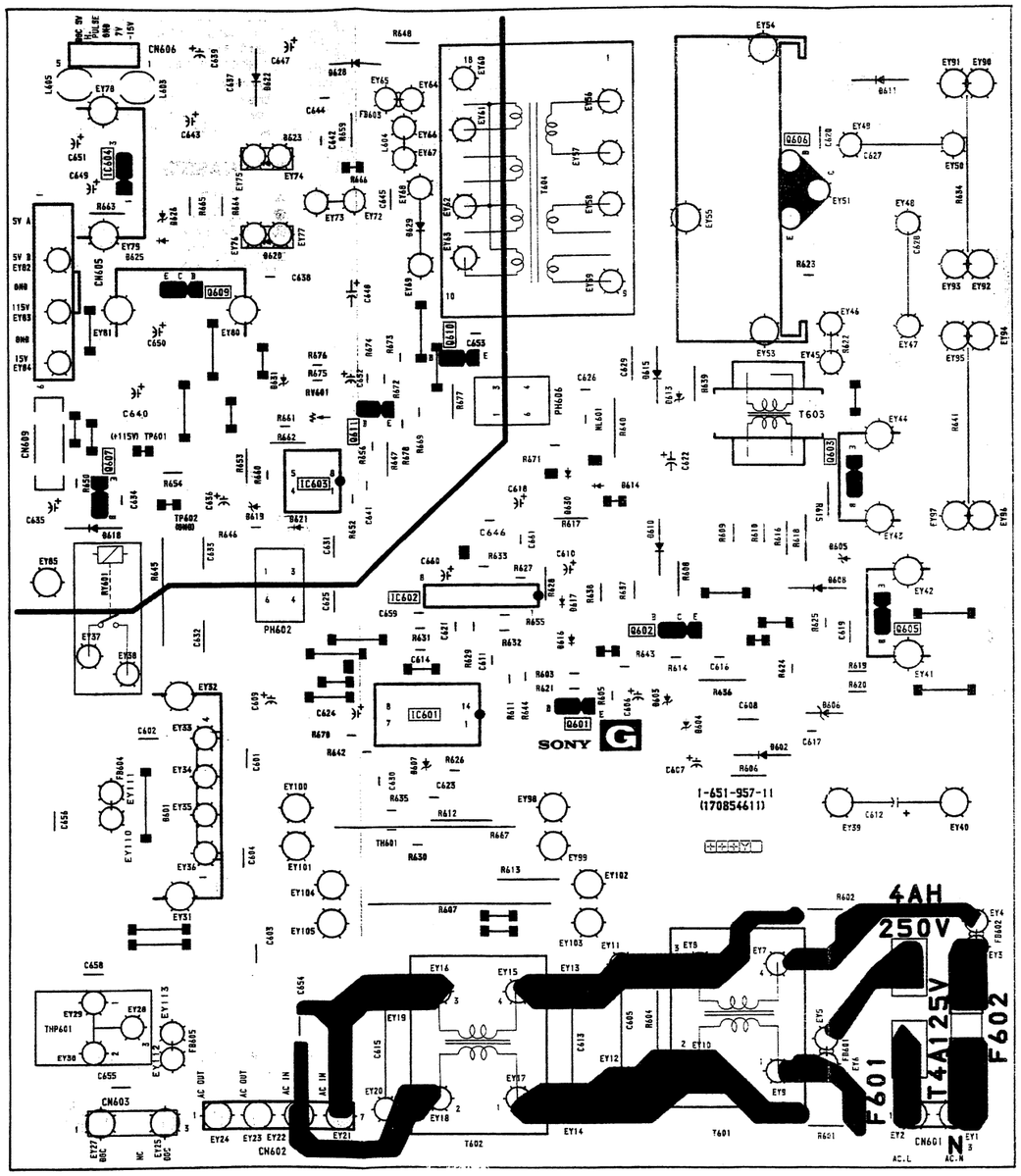

S-VIDEO	ANALOG RGB
1.8	2.0
1.2	1.4
1.8	2.0
1.2	1.4
1.8	1.9
1.2	1.3
144.9	143.8
31.2	111.5
140.4	140.1
145.0	141.8
60.4	106.6
140.7	139.5
144.9	148.6
103.2	114.7
140.8	145.0
144.9	143.7
145.0	141.8
144.9	148.5
167.0	173.5
154.0	161.2
167.0	173.5
154.1	161.3
167.0	173.5
154.5	161.4
166.8	173.5
176.6	183.8
167.2	173.9
167.4	174.1
140.3	145.7
144.9	148.5
140.7	145.0
140.7	139.4
145.1	141.8
140.6	138.4
140.6	141.2
144.9	143.8
140.4	140.0

D701	PROTECT 1
D702	PROTECT 2
D703	PROTECT 3
D704	PROTECT 4
D705	PROTECT 5
D706	PROTECT 6
D707	PROTECT 7
D708	PROTECT 8
D709	PROTECT 9
D713	PROTECT 10
D715	PROTECT 11
D716	PROTECT 12
D717	PROTECT 13
Q701	B DRIVE
Q702	G DRIVE
Q703	R DRIVE
Q704	B BUFF
Q705	G BUFF
Q706	R BUFF
Q707	B OUT
Q708	G OUT
Q709	R OUT
Q710	IK SW 1
Q711	IK SW 2
Q712	IK SW 3
Q713	V. BLK OUT
Q714	V. BLK INT
Q715	TRACE SW 1
Q716	TRACE SW 2
Q717	TRACE SW 3

– Q BOARD –

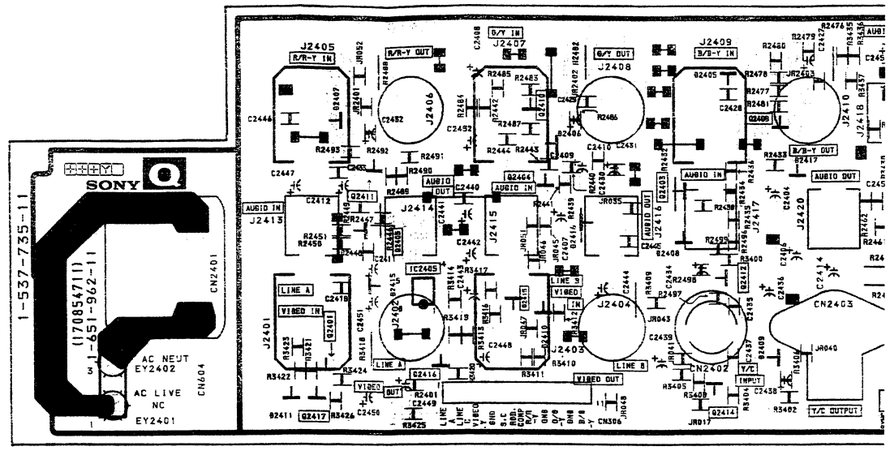

– H BOARD –

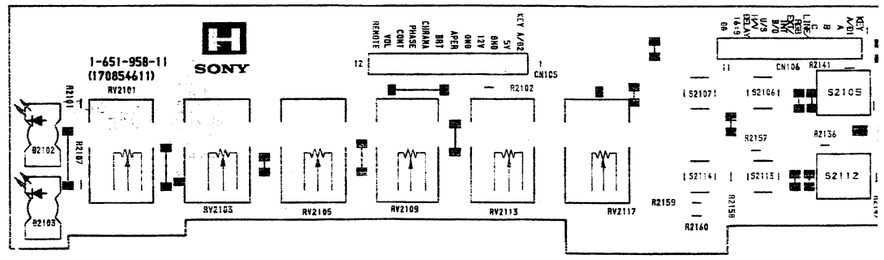

(PVM-1351Q/1354Q only)

– X BOARD –

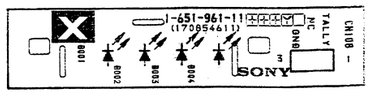

– J BOARD –

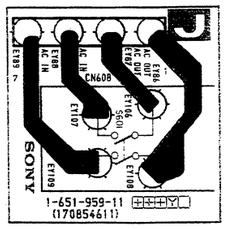

H [CONTROL SWITCH] X [INDICATOR] J [POWER SWITCH] C [R. G. B OUT] S [CAPTION DECORDER]

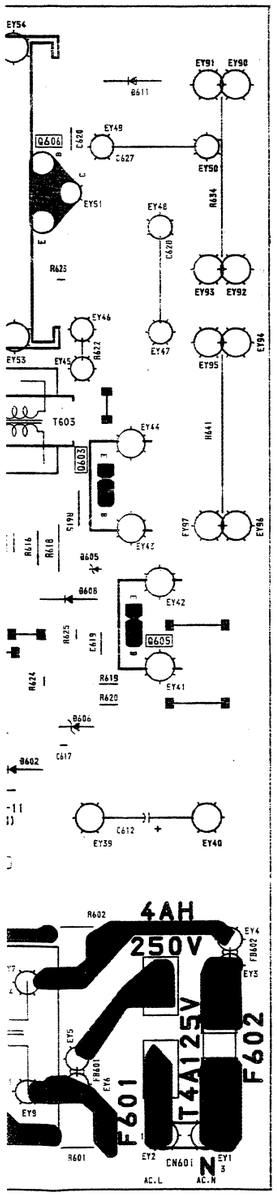

– Q BOARD –

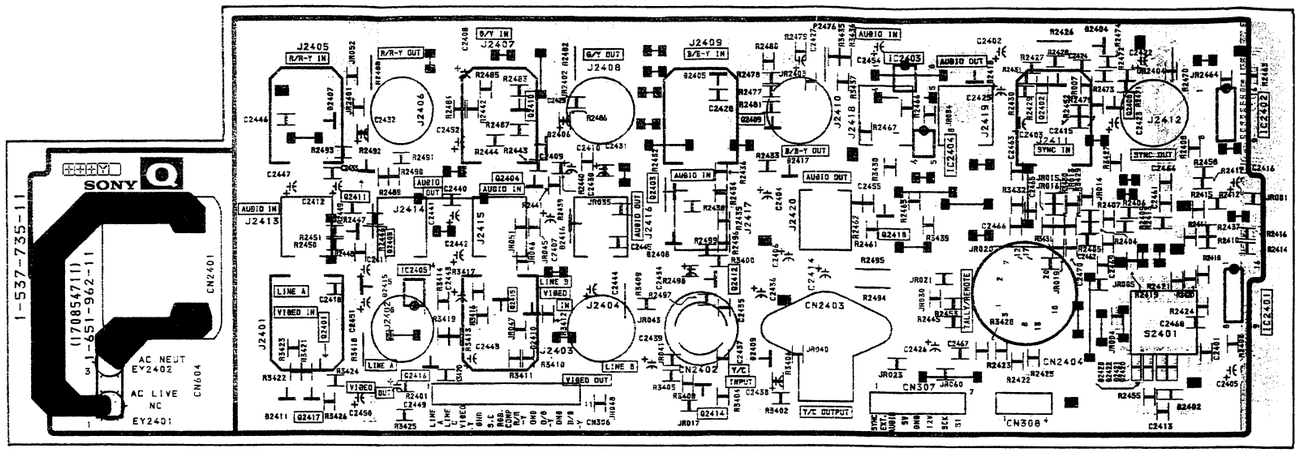

– H BOARD –

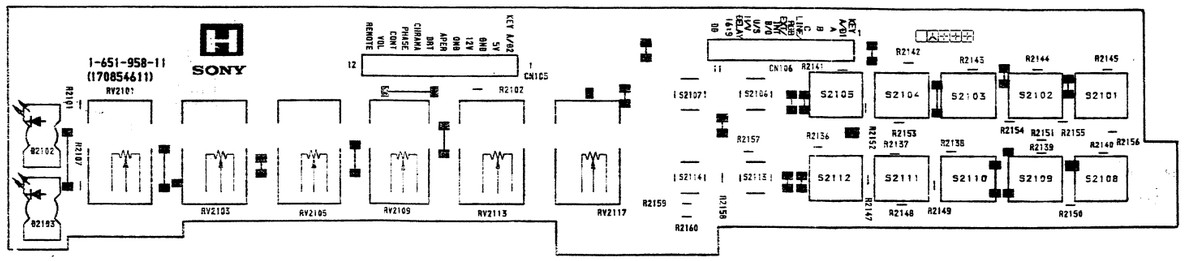

(PVM-1351Q/1354Q only)

– X BOARD –

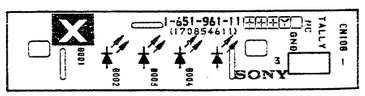

– J BOARD –

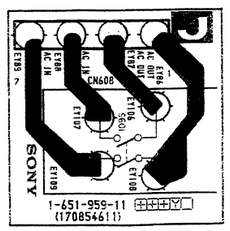

– S BOARD –

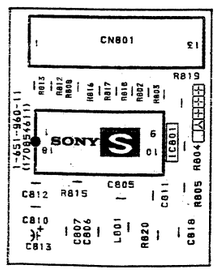

– C BOARD –

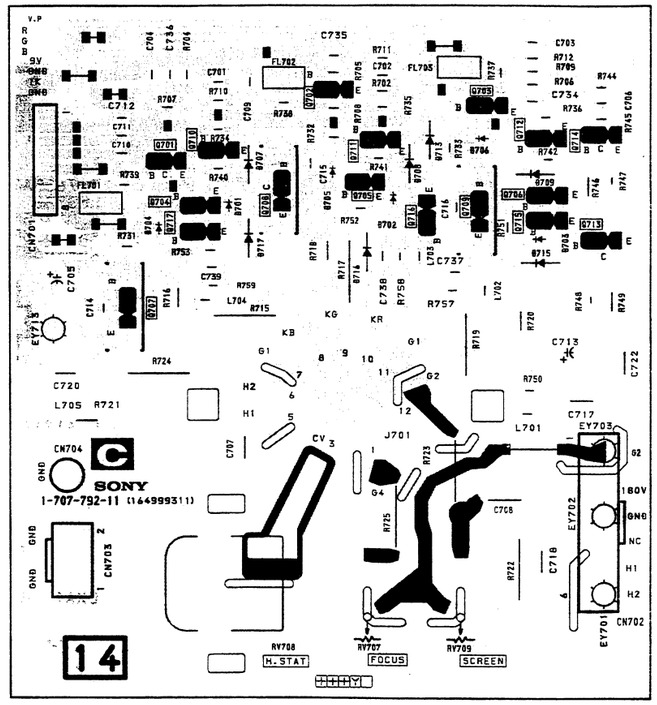

Schematic diagram

← C board

PVM-1350/1351Q/1354Q PVM-1350/1351Q/1354Q

6-5. SEMICONDUCTONS

AN5265

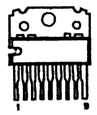

BA7655AF-E2
LM358Ð
NJM2245M
XRA4558F
XRA10393F

CXA1214P

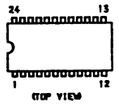

CXA1478S

IR9431
ST24C02AB1

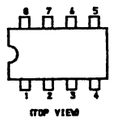

LM324Ð
MC14024BF
MC74HC36F
XRU4066BF-E2
XRU4584BF

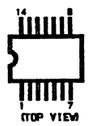

LM7805CT

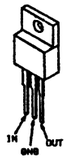

MC14094BF

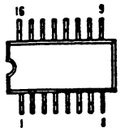

MC14538BF

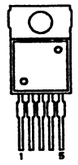

MM1108XS

MM1148XF
MM1149XF

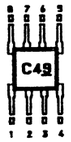

M51279FP

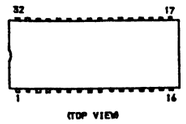

M62358FP-E1

S-80743AL-A7-S

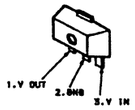

μPC1377C

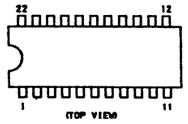

μPC1394C

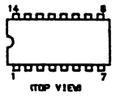

μ PD6451AGT-632-E2
μPÐ6451AGT-629-E2

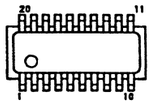

μPÐ78013YCW-Y03

XRA17812T

XRU4052BF

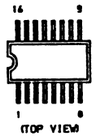

XRU4053BF-E2

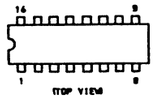

Z8612812PSC

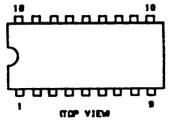

ÐTA144EK
ÐTC124EK
ÐTC144EK
2SA1037K-Q
2SA1162-G
2SC1623-L5L6
2SC2412K

IMT1US

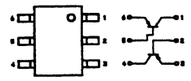

IMX1

2SA1091-O
2SC2551O
2SC2551-RO

2SA1175-HFE
2SC2785-HFE

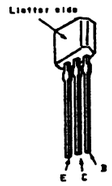

2SA1220A-P
2SC2611
2SC2688-LK
2SC2690A-Q

2SC3460
2SÐ1397-CA

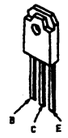

2SC2958-L
2SÐ774-3
2SÐ774-34

2SÐ1134-C
2SÐ1944-K

ÐTZ11B
ÐTZ13C
ÐTZ3.6A
ÐTZ5.6B
ÐTZ6.2
MA110
RÐ4.7SB
1SV232-TPH3
1SV230-TPHR3

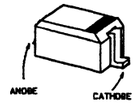

Ð4SB60L

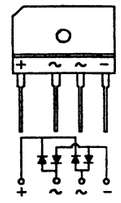

EGP10Ð
EGP30Ð
EGP20G
EL1Z
ERB44-06
GP08Ð
RGP02-17EL-6433
RGP10GPKG23
UF5406
1SS83
10E-2

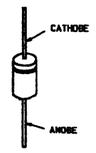

ERC06-15S
RH-1A
RH-1Z
RU-3AM
SIB01-04
SIB01-06

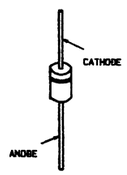

ERC38-06
V19E
V19G

FML-G12S

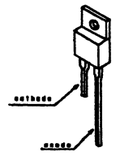

MA151WK

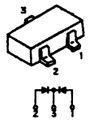

MA157
1SS226

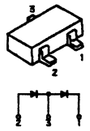

MC932

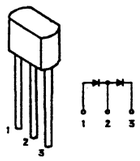

RÐ110EB
RÐ15ES-B2
RÐ3.9ES-B1
RÐ39ES-B4
RÐ6.8ES-B2
1SS119

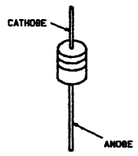

RÐ10SBL

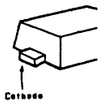

1SS184

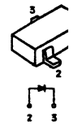

1S2835
1S2836

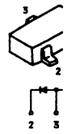

SEL3810ÐLC(

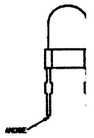

SLP281C-50
TLG123A
TLY123

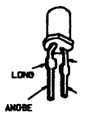

ØTA144EK
ØTC124EK
ØTC144EK
2SA1037K-Q
2SA1162-G
2SC1623-L5L6
2SC2412K

IMT1US

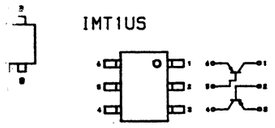

IMX1

2SA1091-O
2SC2551O
2SC2551-RO

2SA1175-HFE
2SC2785-HFE

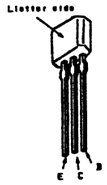

2SA1220A-P
2SC2611
2SC2688-LK
2SC2690A-Q

2SC3460
2SØ1397-CA

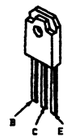

2SC2958-L
2SØ774-3
2SØ774-34

2SØ1134-C
2SØ1944-K

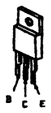

ØTZ11B
ØTZ13C
ØTZ3.6A
ØTZ5.6B
ØTZ6.2
MA110
RØ4.7SB
1SV232-TPH3
1SV230-TPHR3

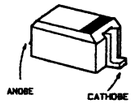

Ø4SB60L

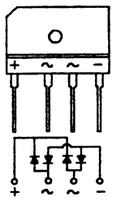

EGP1ØØ
EGP3ØØ
EGP2ØG
EL1Z
ERB44-06
GPØ8Ø
RGP02-17EL-6433
RGP1ØGPKG23
UF5406
1SS83
1ØE-2

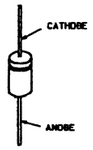

ERC06-15S
RH-1A
RH-1Z
RU-3AM
SIBØ1-04
SIBØ1-06

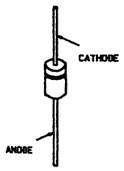

ERC38-06
V19E
V19G

FML-G12S

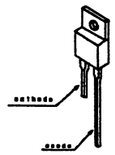

MA151WK

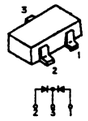

MA157
1SS226

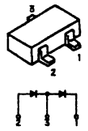

MC932

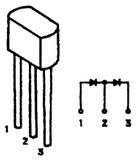

RØ110EB
RØ15ES-B2
RØ3.9ES-B1
RØ39ES-B4
RØ6.8ES-B2
1SS119

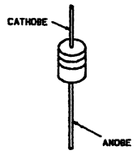

RØ1ØSBL

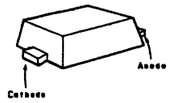

1SS184

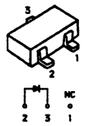

1S2835
1S2836

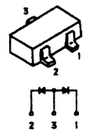

SEL3810ØLC05

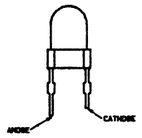

SLP281C-50
TLG123A
TLY123

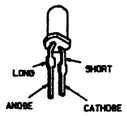

SECTION 7
EXPLODED VIEWS

NOTE:
- Items with no part number and no description are not stocked because they are seldom required for routine service.
- The construction parts of an assembled part are indicated with a collation number in the remark column.
- Items marked " * " are not stocked since they are seldom required for routine service. Some delay should be anticipated when ordering these items.

The components identified by shading and mark ⚠ are critical for safety.
Replace only with part number specified.

Les composants identifies pa une trame et une marque ⚠ sont critiques pour la securite Ne les remplacer que par un piece portant le numero specifie

7-1. CHASSIS

▲ : + BVTP3 × 8 7-685-646-79
● : + BVTP3 × 12 7-685-648-79
■ : + BVTP4 × 16 7-685-663-79
△ : + PS4 × 8 7-682-661-09
□ : + BVTT4 × 8 (S) 7-682-561-04

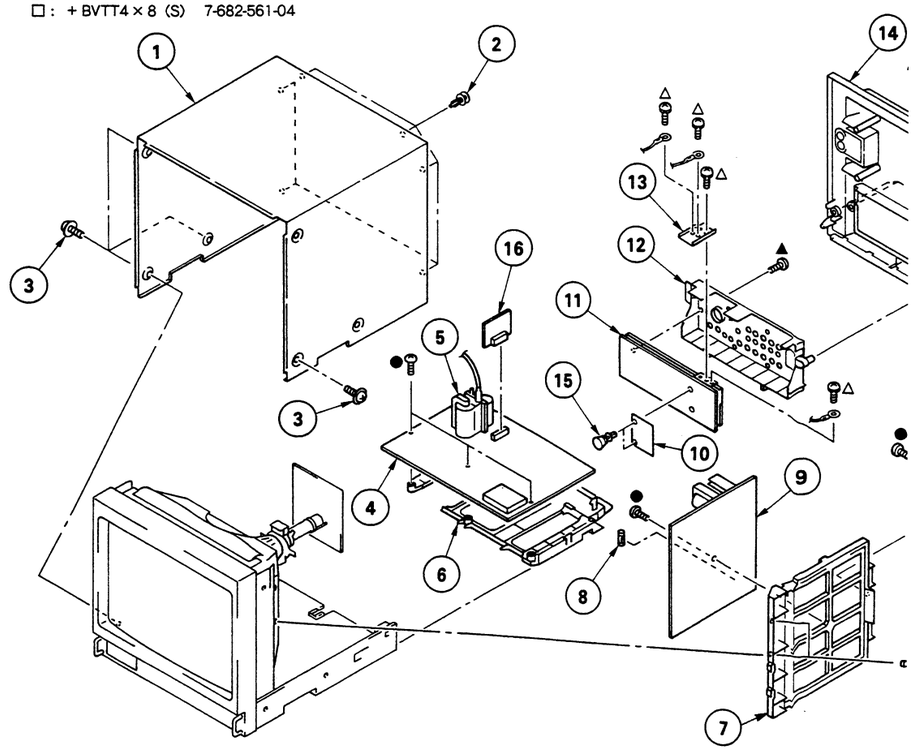

REF.NO.	PART NO.	DESCRIPTION	REMARK
1	X-4031-775-2	COVER ASSY, TOP	
2	4-391-825-01	RIVET, NYLON	
3	4-847-802-11	SCREW (OS), CASE, CLAW	
4	*A-1297-195-A	A BOARD, COMPLETE (PVM-1351Q/1354Q)	
	*A-1297-196-A	A BOARD, COMPLETE (PVM-1350)	
5	⚠1-453-163-11	TRANSFORMER ASSY, FLYBACK	
6	*4-043-690-01	BRACKET, MAIN	
7	*4-043-689-01	BRACKET, G	
8	⚠1-532-746-11	FUSE, GLASS TUBE (4.0A/125V)	
9	*A-1316-174-A	G BOARD, COMPLETE	
10	*4-044-053-01	SHEET, AC COVER	
11	1-537-735-11	TERMINAL BOARD ASSY, I/(	
		(	
	1-537-735-21	TERMINAL BOARD ASSY, I/(	
12	4-043-688-01	PANEL, CONNECTOR (PVM-1	
	4-043-688-11	PANEL, CONNECTOR (PVM-1	
13	*4-043-678-01	TERMINAL, GROUND	
14	4-043-687-01	COVER, REAR	
15	4-386-618-01	RIVET, T TYPE	
16	*A-1390-391-A	S BOARD, COMPLETE	
17	*4-044-256-01	SHEET METAL, G REINFORCI	

ÐTA144EK
ÐTC124EK
ÐTC144EK
2SA1037K-Q
2SA1162-G
2SC1623-L5L6
2SC2412K

IMT1US

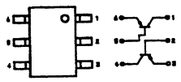

IMX1

2SA1091-O
2SC2551O
2SC2551-RO

2SA1175-HFE
2SC2785-HFE

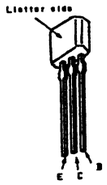

2SA1220A-P
2SC2611
2SC2688-LK
2SC2690A-Q

2SC3460
2SÐ1397-CA

2SC2958-L
2SÐ774-3
2SÐ774-34

2SÐ1134-C
2SÐ1944-K

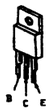

ÐTZ11B
ÐTZ13C
ÐTZ3.6A
ÐTZ5.6B
ÐTZ6.2
MA110
RÐ4.7SB
1SV232-TPH3
1SV230-TPHR3

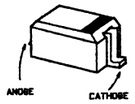

Ð4SB60L

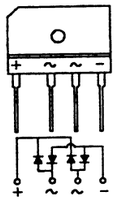

EGP10Ð
EGP30Ð
EGP20G
EL1Z
ERB44-06
GP08Ð
RGP02-17EL-6433
RGP10GPKG23
UF5406
1SS83
10E-2

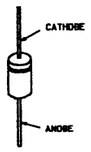

ERC06-15S
RH-1A
RH-1Z
RU-3AM
SIB01-04
SIB01-06

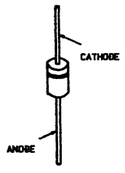

ERC38-06
V19E
V19G

FML-G12S

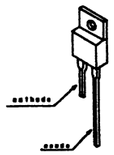

MA151WK

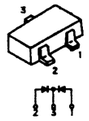

MA157
1SS226

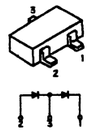

MC932

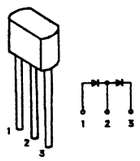

RÐ110EB
RÐ15ES-B2
RÐ3.9ES-B1
RÐ39ES-B4
RÐ6.8ES-B2
1SS119

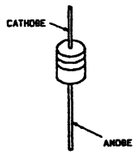

RÐ10SBL

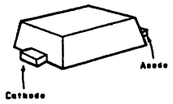

1SS184

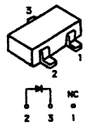

1S2835
1S2836

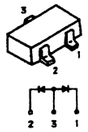

SEL3810ÐLC05

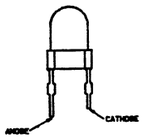

SLP281C-50
TLG123A
TLY123

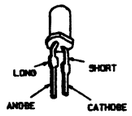

SECTION 7
EXPLODED VIEWS

NOTE:
- Items with no part number and no description are not stocked because they are seldom required for routine service.
- The construction parts of an assembled part are indicated with a collation number in the remark column.
- Items marked " * " are not stocked since they are seldom required for routine service. Some delay should be anticipated when ordering these items.

The components identified by shading and mark ⚠ are critical for safety.
Replace only with part number specified.

Les composants identifies par une trame et une marque ⚠ sont critiques pour la securite.
Ne les remplacer que par une piece portant le numero specifie.

7-1. CHASSIS

▲ : + BVTP3 × 8 7-685-646-79
● : + BVTP3 × 12 7-685-648-79
■ : + BVTP4 × 16 7-685-663-79
△ : + PS4 × 8 7-682-661-09
□ : + BVTT4 × 8 (S) 7-682-561-04

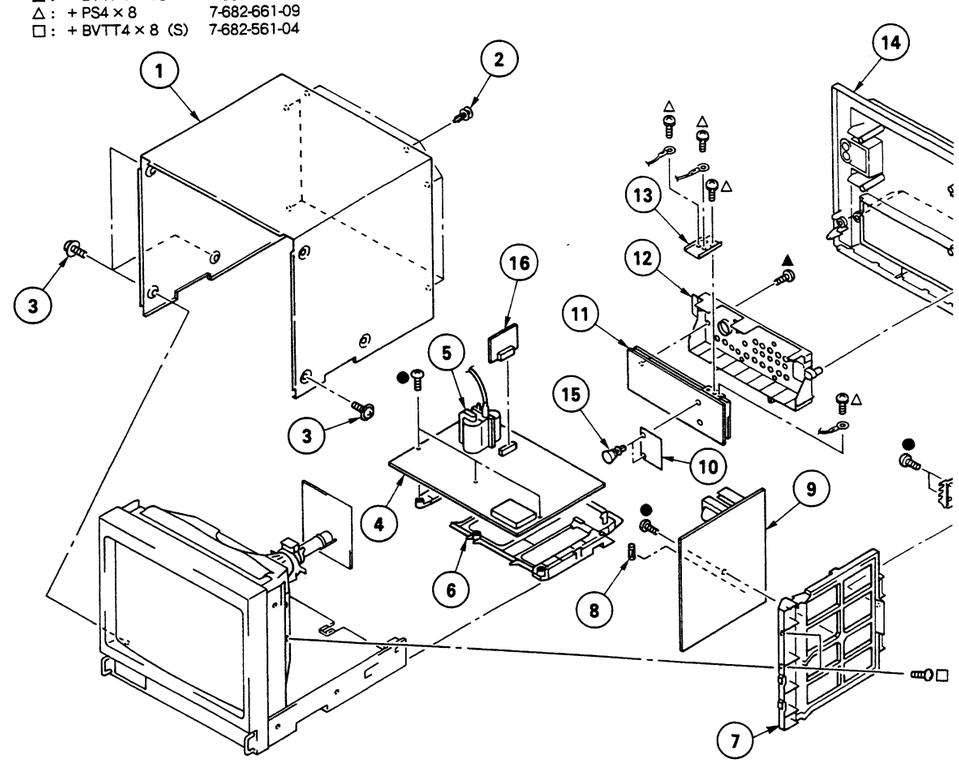

REF.NO.	PART NO.	DESCRIPTION	REMARK
1	X-4031-775-2	COVER ASSY, TOP	
2	4-391-825-01	RIVET, NYLON	
3	4-847-802-11	SCREW (OS), CASE, CLAW	
4	*A-1297-195-A	A BOARD, COMPLETE (PVM-1351Q/1354Q)	
	*A-1297-196-A	A BOARD, COMPLETE (PVM-1350)	
5	⚠1-453-163-11	TRANSFORMER ASSY, FLYBACK	
6	*4-043-690-01	BRACKET, MAIN	
7	*4-043-689-01	BRACKET, G	
8	⚠1-532-746-11	FUSE, GLASS TUBE (4.0A/125V)	
9	*A-1316-174-A	G BOARD, COMPLETE	
10	*4-044-053-01	SHEET, AC COVER	
11	1-537-735-11	TERMINAL BOARD ASSY, I/O (A (PVM-	
	1-537-735-21	TERMINAL BOARD ASSY, I/O (E	
12	4-043-688-01	PANEL, CONNECTOR (PVM-1351Q	
	4-043-688-11	PANEL, CONNECTOR (PVM-1350)	
13	*4-043-678-01	TERMINAL, GROUND	
14	4-043-687-01	COVER, REAR	
15	4-386-618-01	RIVET, T TYPE	
16	*A-1390-391-A	S BOARD, COMPLETE	
17	*4-044-256-01	SHEET METAL, G REINFORCEME	

SECTION 7
EXPLODED VIEWS

NOTE:
- Items with no part number and no description are not stocked because they are seldom required for routine service.
- The construction parts of an assembled part are indicated with a collation number in the remark column.
- Items marked " * " are not stocked since they are seldom required for routine service. Some delay should be anticipated when ordering these items.

The components identified by shading and mark ⚠ are critical for safety.
Replace only with part number specified.

Les composants identifies par une trame et une marque ⚠ sont critiques pour la securite.
Ne les remplacer que par une piece portant le numero specifie.

7-1. CHASSIS

▲ : + BVTP3 × 8 7-685-646-79
● : + BVTP3 × 12 7-685-648-79
■ : + BVTP4 × 16 7-685-663-79
△ : + PS4 × 8 7-682-661-09
□ : + BVTT4 × 8 (S) 7-682-561-04

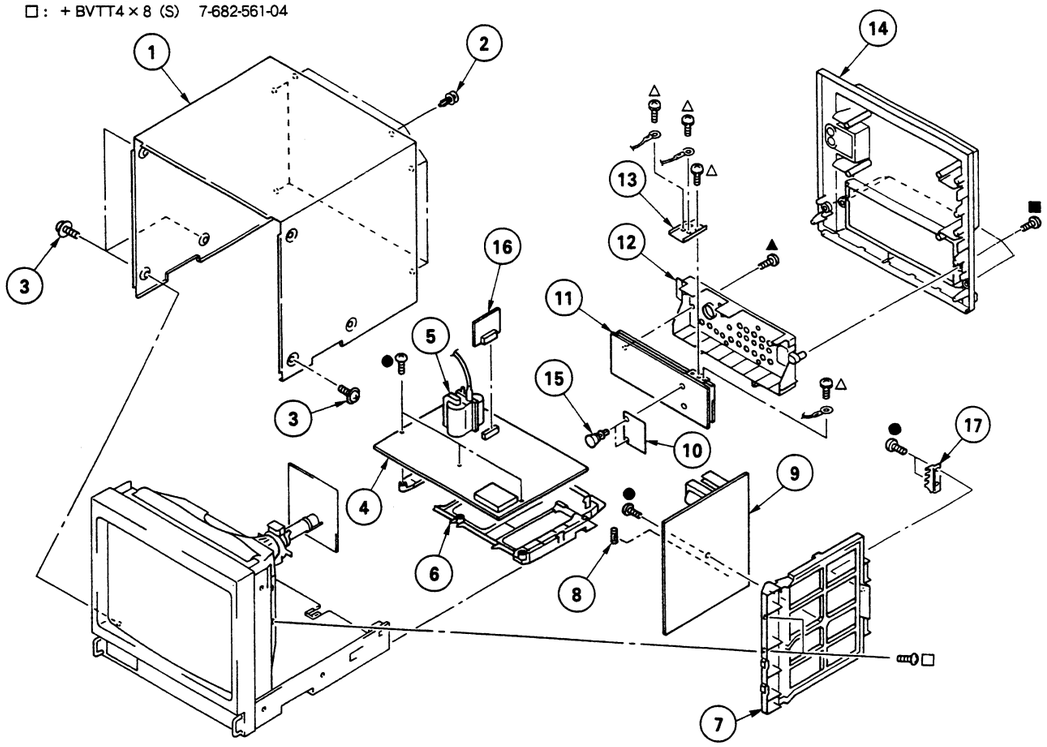

REF.NO.	PART NO.	DESCRIPTION	REMARK
1	X-4031-775-2	COVER ASSY, TOP	
2	4-391-825-01	RIVET, NYLON	
3	4-847-802-11	SCREW (OS), CASE, CLAW	
4	*A-1297-195-A	A BOARD, COMPLETE (PVM-1351Q/1354Q)	
	*A-1297-196-A	A BOARD, COMPLETE (PVM-1350)	
5	⚠1-453-163-11	TRANSFORMER ASSY, FLYBACK	
6	*4-043-690-01	BRACKET, MAIN	
7	*4-043-689-01	BRACKET, G	
8	⚠1-532-746-11	FUSE, GLASS TUBE (4.0A/125V)	
9	*A-1316-174-A	G BOARD, COMPLETE	
10	*4-044-053-01	SHEET, AC COVER	
11	1-537-735-11	TERMINAL BOARD ASSY, I/O (A) (PVM-1351Q/1354Q)	
	1-537-735-21	TERMINAL BOARD ASSY, I/O (B) (PVM-1350)	
12	4-043-688-01	PANEL, CONNECTOR (PVM-1351Q/1354Q)	
	4-043-688-11	PANEL, CONNECTOR (PVM-1350)	
13	*4-043-678-01	TERMINAL, GROUND	
14	4-043-687-01	COVER, REAR	
15	4-386-618-01	RIVET, T TYPE	
16	*A-1390-391-A	S BOARD, COMPLETE	
17	*4-044-256-01	SHEET METAL, G REINFORCEMENT	

7-2. PICTURE TUBE

● : + BVTP3 × 12 7-685-648-79
○ : + B4 × 12 7-682-563-09

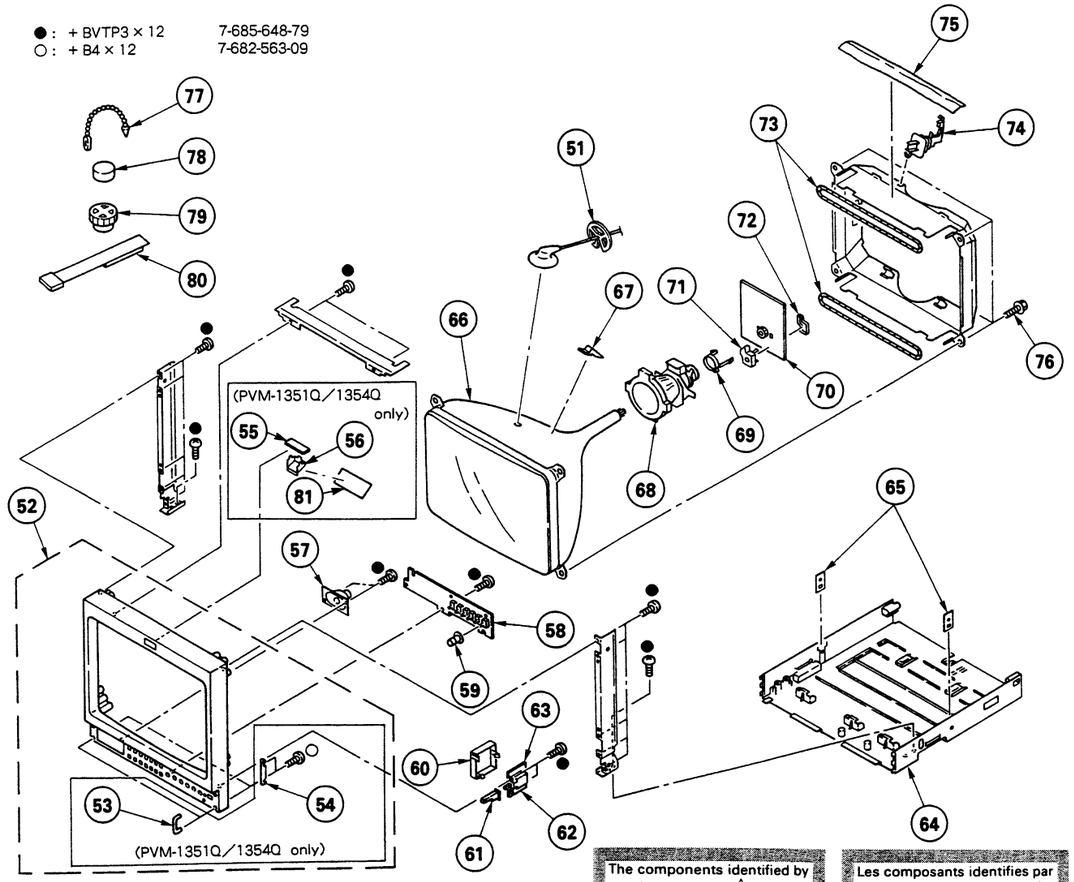

The components identified by shading and mark ⚠ are critical for safety.
Replace only with part number specified.

Les composants identifies par une trame et une marque ⚠ sont critiques pour la securite.
Ne les remplacer que par une piece portant le numero specifie.

REF.NO.	PART NO.	DESCRIPTION	REMARK
51	*3-704-372-01	HOLDER, HV CABLE	
52	X-4031-757-1	BEZEL ASSY (PVM-1350)	53,54
	X-4031-756-1	BEZEL ASSY (PVM-1354Q)	53,54
	X-4031-756-2	BEZEL ASSY (PVM-1351Q)	53,54
53	4-043-680-01	HANDLE, PROTECTOR (PVM-1351Q/1354Q)	
54	*4-043-679-01	REINFORCEMENT, HANDLE (PVM-1351Q/1354Q)	
55	*A-1390-390-A	X BOARD, COMPLETE (PVM-1351Q/1354Q)	
56	*4-043-682-01	REFLECTOR, LED (PVM-1351Q/1354Q)	
57	1-544-063-12	SPEAKER	
58	*A-1371-971-A	H BOARD, COMPLETE (PVM-1351Q/1354Q)	
	*A-1371-972-A	H BOARD, COMPLETE (PVM-1350)	
59	X-4030-162-2	KNOB ASSY, CONTROL	
60	4-043-681-01	COVER, AC SWITCH	
61	4-043-683-01	BUTTON, POWER SWITCH	
62	⚠1-692-921-11	SWITCH, PUSH (A.C. POWER)	
63	*A-1388-166-A	J BOARD, COMPLETE	
64	X-4031-711-1	CABINET ASSY, BOTTOM	
65	4-042-608-01	NUT, PLATE	
66	⚠8-734-822-05	PICTURE TUBE (M34KBE20X) (PVM-1354Q)	
	⚠8-736-255-05	PICTURE TUBE (A34JHS12X) (PVM-1350/1351Q)	
67	3-703-961-01	SPACER, DY	
68	⚠1-451-329-11	DEFLECTION YOKE (Y14FZA)	
69	*4-382-050-01	BAND, C PC BOARD	
70	*A-1331-299-A	C BOARD, COMPLETE	
71	*4-374-912-01	COVER (MAIN), CV VOL	
72	*4-374-913-01	COVER (REAR LID), CV VOL	
73	⚠1-426-442-21	COIL, DEMAGNETIZATION	
74	4-033-681-01	HOLDER, LEAD	
75	4-391-833-01	CLOTH, PROTECTION	
76	4-365-808-01	SCREW (5), TAPPING	
77	4-308-870-00	CLIP, LEAD WIRE	
78	1-452-032-00	MAGNET, DISK; 10MM ϕ	
79	1-452-094-00	MAGNET, ROTATABLE DISK; 15MM ϕ	
80	X-4309-608-0	PERMALLOY ASSY, CONVERGENCE	
81	4-044-606-01	CUSHION, TALLY	

SECTION 8
ELECTRICAL PARTS LIST

A (PVM-1351Q/1354Q)

NOTE:

The components identified by shading and mark ⚠ are critical for safety.
Replace only with part number specified.

Les composants identifies par une trame et une marque ⚠ sont critiques pour la securite.
Ne les remplacer que par une piece portant le numero specifie.

- Items marked " * " are not stocked since they are seldom required for routine service. Some delay should be anticipated when ordering these items.
- All variable and adjustable resistors have characteristic curve B, unless otherwise noted.

RESISTORS
- All resistors are in ohms
- F : nonflammable

When indicating parts by reference number, please include the board name.

CAPACITORS
- MF : μF, PF : μμF

COILS
- MMH : mH, UH : μH

- The components identified by ⊠ in this manual have been carefully factory-selected for each set in order to satisfy regulations regarding X-ray radiation. Should replacement be required, replace only with the value originally used.
- ✱ : Selected to yield optimum performance.
- There are some cases the reference number on one board overlaps on the other board. Therefore, when ordering parts by the reference number, please include the board name.

REF.NO.	PART NO.	DESCRIPTION			REMARK
	*A-1297-195-A	A BOARD, COMPLETE (PVM-1351Q/1354Q)			
		**********			
	1-540-044-11	SOCKET, IC			
	*4-030-359-01	HEAT SINK, H. PIN			
	*4-043-154-01	HOLDER, IC			
	*4-043-994-01	PLATE (CF), SHIELD			
	4-363-414-00	SPACER, MICA			
	4-382-854-11	SCREW (M3X10), P. SW (+)			
		<BAND PASS FLTER>			
BPF400	1-236-363-11	FILTER, BAND PASS			
		<CAPACITOR>			
C105	1-163-251-11	CERAMIC CHIP 100PF	5%		50V
C106	1-163-251-11	CERAMIC CHIP 100PF	5%		50V
C114	1-163-031-11	CERAMIC CHIP 0.01MF			50V
C115	1-163-031-11	CERAMIC CHIP 0.01MF			50V
C116	1-163-031-11	CERAMIC CHIP 0.01MF			50V
C117	1-163-031-11	CERAMIC CHIP 0.01MF			50V
C118	1-163-125-00	CERAMIC CHIP 220PF	5%		50V
C119	1-165-319-11	CERAMIC CHIP 0.1MF			50V
C121	1-163-237-11	CERAMIC CHIP 27PF	5%		50V
C123	1-165-319-11	CERAMIC CHIP 0.1MF			50V
C124	1-163-251-11	CERAMIC CHIP 100PF	5%		50V
C132	1-163-141-00	CERAMIC CHIP 0.001MF	5%		50V
C133	1-163-251-11	CERAMIC CHIP 100PF	5%		50V
C134	1-163-251-11	CERAMIC CHIP 100PF	5%		50V
C135	1-163-251-11	CERAMIC CHIP 100PF	5%		50V
C136	1-163-251-11	CERAMIC CHIP 100PF	5%		50V
C141	1-164-161-11	CERAMIC CHIP 0.0022MF	10%		50V
C142	1-163-125-00	CERAMIC CHIP 220PF	5%		50V
C143	1-165-319-11	CERAMIC CHIP 0.1MF			50V
C144	1-165-319-11	CERAMIC CHIP 0.1MF			50V
C145	1-165-319-11	CERAMIC CHIP 0.1MF			50V
C154	1-163-037-11	CERAMIC CHIP 0.022MF	10%		25V
C155	1-163-023-00	CERAMIC CHIP 0.015MF	10%		50V
C156	1-163-019-00	CERAMIC CHIP 0.0068MF	10%		50V
C157	1-163-019-00	CERAMIC CHIP 0.0068MF	10%		50V
C158	1-163-809-11	CERAMIC CHIP 0.047MF	10%		25V
C159	1-163-037-11	CERAMIC CHIP 0.022MF	10%		25V
C161	1-124-477-11	ELECT 47MF	20%		16V
C162	1-163-141-00	CERAMIC CHIP 0.001MF	5%		50V
C164	1-165-319-11	CERAMIC CHIP 0.1MF			50V
C165	1-165-319-11	CERAMIC CHIP 0.1MF			50V
C166	1-164-004-11	CERAMIC CHIP 0.1MF	10%		25V
C167	1-124-472-11	ELECT 470MF	20%		10V
C168	1-124-472-11	ELECT 470MF	20%		10V
C169	1-164-232-11	CERAMIC CHIP 0.01MF	10%		50V
C171	1-163-251-11	CERAMIC CHIP 100PF	5%		50V
C172	1-163-243-11	CERAMIC CHIP 47PF	5%		50V
C173	1-163-243-11	CERAMIC CHIP 47PF	5%		50V
C174	1-163-243-11	CERAMIC CHIP 47PF	5%		50V
C200	1-124-927-11	ELECT 4.7MF	20%		50V
C201	1-106-383-00	MYLAR 0.047MF	10%		100V
C202	1-163-017-00	CERAMIC CHIP 0.0047MF	10%		50V
C203	1-124-927-11	ELECT 4.7MF	20%		50V
C204	1-124-907-11	ELECT 10MF	20%		50V
C205	1-124-360-00	ELECT 1000MF	20%		16V
C206	1-126-375-11	ELECT 100MF	20%		25V
C207	1-124-478-11	ELECT 100MF	20%		25V
C208	1-124-907-11	ELECT 10MF	20%		50V
C209	1-124-927-11	ELECT 4.7MF	20%		50V
C300	1-163-031-11	CERAMIC CHIP 0.01MF			50V
C304	1-164-004-11	CERAMIC CHIP 0.1MF	10%		25V
C305	1-163-125-00	CERAMIC CHIP 220PF	5%		50V
C306	1-163-031-11	CERAMIC CHIP 0.01MF			50V
C309	1-163-031-11	CERAMIC CHIP 0.01MF			50V
C310	1-164-004-11	CERAMIC CHIP 0.1MF	10%		25V
C311	1-163-809-11	CERAMIC CHIP 0.047MF	10%		25V
C312	1-124-925-11	ELECT 2.2MF	20%		50V
C313	1-163-145-00	CERAMIC CHIP 0.0015MF	5%		50V
C314	1-163-249-11	CERAMIC CHIP 82PF	5%		50V
C315	1-124-907-11	ELECT 10MF	20%		50V
C316	1-124-477-11	ELECT 47MF	20%		25V
C317	1-163-097-00	CERAMIC CHIP 15PF	5%		50V
C318	1-124-907-11	ELECT 10MF	20%		50V
C319	1-163-222-11	CERAMIC CHIP 5PF	0.25PF		50V
C320	1-163-031-11	CERAMIC CHIP 0.01MF			50V
C322	1-163-119-00	CERAMIC CHIP 120PF	5%		50V
C323	1-163-097-00	CERAMIC CHIP 15PF	5%		50V
C324	1-163-235-11	CERAMIC CHIP 22PF	5%		50V
C325	1-124-907-11	ELECT 10MF	20%		50V
C326	1-164-004-11	CERAMIC CHIP 0.1MF	10%		25V
C327	1-164-004-11	CERAMIC CHIP 0.1MF	10%		25V
C328	1-163-031-11	CERAMIC CHIP 0.01MF			50V
C329	1-163-251-11	CERAMIC CHIP 100PF	5%		50V
C330	1-163-243-11	CERAMIC CHIP 47PF	5%		50V
C331	1-163-097-00	CERAMIC CHIP 15PF	5%		50V
C332	1-164-004-11	CERAMIC CHIP 0.1MF	10%		25V
C333	1-163-031-11	CERAMIC CHIP 0.01MF			50V
C334	1-163-141-00	CERAMIC CHIP 0.001MF	5%		50V
C335	1-163-141-00	CERAMIC CHIP 0.001MF	5%		50V
C336	1-124-477-11	ELECT 47MF	20%		25V
C337	1-163-031-11	CERAMIC CHIP 0.01MF			50V
C338	1-163-119-00	CERAMIC CHIP 120PF	5%		50V
C339	1-163-097-00	CERAMIC CHIP 15PF	5%		50V
C340	1-163-031-11	CERAMIC CHIP 0.01MF			50V
C341	1-163-119-00	CERAMIC CHIP 120PF	5%		50V
C342	1-163-018-00	CERAMIC CHIP 0.0056MF	10%		50V

A (PVM-1351Q/1354Q)

REF.NO.	PART NO.	DESCRIPTION		REMARK
C343	1-163-031-11	CERAMIC CHIP 0.01MF		50V
C344	1-163-141-00	CERAMIC CHIP 0.001MF	5%	50V
C345	1-163-141-00	CERAMIC CHIP 0.001MF	5%	50V
C346	1-124-903-11	ELECT 1MF	20%	50V
C347	1-163-243-11	CERAMIC CHIP 47PF	5%	50V
C348	1-164-004-11	CERAMIC CHIP 0.1MF	10%	25V
C349	1-163-141-00	CERAMIC CHIP 0.001MF	5%	50V
C350	1-163-141-00	CERAMIC CHIP 0.001MF	5%	50V
C351	1-124-477-11	ELECT 47MF	20%	25V
C352	1-163-031-11	CERAMIC CHIP 0.01MF		50V
C353	1-165-319-11	CERAMIC CHIP 0.1MF		50V
C354	1-163-121-00	CERAMIC CHIP 150PF	5%	50V
C355	1-124-903-11	ELECT 1MF	20%	50V
C356	1-124-927-11	ELECT 4.7MF	20%	50V
C357	1-163-031-11	CERAMIC CHIP 0.01MF		50V
C358	1-163-031-11	CERAMIC CHIP 0.01MF		50V
C359	1-124-477-11	ELECT 47MF	20%	25V
C360	1-164-232-11	CERAMIC CHIP 0.01MF	10%	50V
C361	1-163-031-11	CERAMIC CHIP 0.01MF		50V
C362	1-163-031-11	CERAMIC CHIP 0.01MF		50V
C363	1-163-099-00	CERAMIC CHIP 18PF	5%	50V
C364	1-163-031-11	CERAMIC CHIP 0.01MF		50V
C365	1-106-343-00	MYLAR 0.001MF	10%	100V
C366	1-163-031-11	CERAMIC CHIP 0.01MF		50V
C367	1-163-031-11	CERAMIC CHIP 0.01MF		50V
C368	1-124-907-11	ELECT 10MF	20%	50V
C369	1-164-298-11	CERAMIC CHIP 0.15MF	10%	25V
C370	1-124-477-11	ELECT 47MF	20%	25V
C371	1-124-477-11	ELECT 47MF	20%	25V
C372	1-163-031-11	CERAMIC CHIP 0.01MF		50V
C373	1-163-141-00	CERAMIC CHIP 0.001MF	5%	50V
C374	1-124-903-11	ELECT 1MF	20%	50V
C375	1-163-125-00	CERAMIC CHIP 220PF	5%	50V
C376	1-124-902-00	ELECT 0.47MF	20%	50V
C377	1-163-809-11	CERAMIC CHIP 0.047MF	10%	25V
C378	1-163-809-11	CERAMIC CHIP 0.047MF	10%	25V
C379	1-163-031-11	CERAMIC CHIP 0.01MF		50V
C380	1-124-472-11	ELECT 470MF	20%	10V
C381	1-163-031-11	CERAMIC CHIP 0.01MF		50V
C382	1-163-243-11	CERAMIC CHIP 47PF	5%	50V
C383	1-124-477-11	ELECT 47MF	20%	25V
C384	1-163-249-11	CERAMIC CHIP 82PF	5%	50V
C385	1-124-477-11	ELECT 47MF	20%	25V
C386	1-124-907-11	ELECT 10MF	20%	50V
C387	1-163-141-00	CERAMIC CHIP 0.001MF	5%	50V
C388	1-124-907-11	ELECT 10MF	20%	50V
C389	1-124-477-11	ELECT 47MF	20%	25V
C390	1-163-243-11	CERAMIC CHIP 47PF	5%	50V
C391	1-124-477-11	ELECT 47MF	20%	25V
C392	1-164-298-11	CERAMIC CHIP 0.15MF	10%	25V
C393	1-164-298-11	CERAMIC CHIP 0.15MF	10%	25V
C394	1-124-477-11	ELECT 47MF	20%	25V
C395	1-163-235-11	CERAMIC CHIP 22PF	5%	50V
C396	1-164-299-11	CERAMIC CHIP 0.22MF	10%	25V
C397	1-124-477-11	ELECT 47MF	20%	25V
C398	1-124-477-11	ELECT 47MF	20%	25V
C399	1-124-477-11	ELECT 47MF	20%	25V
C400	1-164-232-11	CERAMIC CHIP 0.01MF	10%	50V
C401	1-164-346-11	CERAMIC CHIP 1MF		16V
C402	1-124-910-11	ELECT 47MF	20%	50V
C403	1-164-232-11	CERAMIC CHIP 0.01MF	10%	50V
C406	1-124-916-11	ELECT 22MF	20%	50V
C407	1-124-477-11	ELECT 47MF	20%	25V
C408	1-164-232-11	CERAMIC CHIP 0.01MF	10%	50V
C409	1-163-031-11	CERAMIC CHIP 0.01MF		50V
C410	1-124-916-11	ELECT 22MF	20%	50V
C411	1-164-004-11	CERAMIC CHIP 0.1MF	10%	25V
C414	1-163-031-11	CERAMIC CHIP 0.01MF		50V
C415	1-124-907-11	ELECT 10MF	20%	50V
C416	1-164-232-11	CERAMIC CHIP 0.01MF	10%	50V
C417	1-164-232-11	CERAMIC CHIP 0.01MF	10%	50V
C418	1-164-182-11	CERAMIC CHIP 0.0033MF	10%	50V
C419	1-124-472-11	ELECT 470MF	20%	10V
C420	1-163-809-11	CERAMIC CHIP 0.047MF	10%	25V
C421	1-164-222-11	CERAMIC CHIP 0.22MF		25V
C422	1-124-903-11	ELECT 1MF	20%	50V
C423	1-163-809-11	CERAMIC CHIP 0.047MF	10%	25V
C424	1-163-809-11	CERAMIC CHIP 0.047MF	10%	25V
C425	1-163-031-11	CERAMIC CHIP 0.01MF		50V
C426	1-163-243-11	CERAMIC CHIP 47PF	5%	50V
C427	1-163-031-11	CERAMIC CHIP 0.01MF		50V
C428	1-124-119-00	ELECT 330MF	20%	16V
C429	1-163-031-11	CERAMIC CHIP 0.01MF		50V
C430	1-124-119-00	ELECT 330MF	20%	16V
C431	1-165-319-11	CERAMIC CHIP 0.1MF		50V
C432	1-164-004-11	CERAMIC CHIP 0.1MF	10%	25V
C433	1-163-235-11	CERAMIC CHIP 22PF	5%	50V
C434	1-163-031-11	CERAMIC CHIP 0.01MF		50V
C435	1-163-089-00	CERAMIC CHIP 6PF	0.25PF	50V
C436	1-164-004-11	CERAMIC CHIP 0.1MF	10%	25V
C437	1-164-004-11	CERAMIC CHIP 0.1MF	10%	25V
C438	1-163-809-11	CERAMIC CHIP 0.047MF	10%	25V
C439	1-163-809-11	CERAMIC CHIP 0.047MF	10%	25V
C440	1-163-031-11	CERAMIC CHIP 0.01MF		50V
C441	1-126-962-11	ELECT 3.3MF	20%	50V
C442	1-163-809-11	CERAMIC CHIP 0.047MF	10%	25V
C443	1-163-243-11	CERAMIC CHIP 47PF	5%	50V
C444	1-165-319-11	CERAMIC CHIP 0.1MF		50V
C445	1-163-809-11	CERAMIC CHIP 0.047MF	10%	25V
C446	1-163-089-00	CERAMIC CHIP 6PF	0.25PF	50V
C447	1-163-263-11	CERAMIC CHIP 330PF	5%	50V
C448	1-163-243-11	CERAMIC CHIP 47PF	5%	50V
C449	1-163-227-11	CERAMIC CHIP 10PF	0.5PF	50V
C450	1-163-809-11	CERAMIC CHIP 0.047MF	10%	25V
C451	1-164-004-11	CERAMIC CHIP 0.1MF	10%	25V
C452	1-163-263-11	CERAMIC CHIP 330PF	5%	50V
C453	1-163-031-11	CERAMIC CHIP 0.01MF		50V
C454	1-163-243-11	CERAMIC CHIP 47PF	5%	50V
C455	1-163-263-11	CERAMIC CHIP 330PF	5%	50V
C456	1-163-089-00	CERAMIC CHIP 6PF	0.25PF	50V
C457	1-163-031-11	CERAMIC CHIP 0.01MF		50V
C458	1-163-249-11	CERAMIC CHIP 82PF	5%	50V
C459	1-165-319-11	CERAMIC CHIP 0.1MF		50V
C460	1-164-004-11	CERAMIC CHIP 0.1MF	10%	25V
C461	1-163-119-00	CERAMIC CHIP 120PF	5%	50V
C462	1-163-031-11	CERAMIC CHIP 0.01MF		50V
C463	1-163-031-11	CERAMIC CHIP 0.01MF		50V
C464	1-164-299-11	CERAMIC CHIP 0.22MF	10%	25V
C465	1-163-097-00	CERAMIC CHIP 15PF	5%	50V
C466	1-163-119-00	CERAMIC CHIP 120PF	5%	50V
C467	1-163-119-00	CERAMIC CHIP 120PF	5%	50V
C469	1-163-037-11	CERAMIC CHIP 0.022MF	10%	25V
C470	1-163-243-11	CERAMIC CHIP 47PF	5%	50V
C471	1-163-105-00	CERAMIC CHIP 33PF	5%	50V
C472	1-163-031-11	CERAMIC CHIP 0.01MF		50V
C473	1-163-031-11	CERAMIC CHIP 0.01MF		50V
C475	1-163-031-11	CERAMIC CHIP 0.01MF		50V

The components identified by shading and mark ⚠ are critical for safety.
Replace only with part number specified.

Les composants identifies par une trame et une marque ⚠ sont critiques pour la securite.
Ne les remplacer que par une piece portant le numero specifie.

A (PVM-1351Q/1354Q)

REF.NO.	PART NO.	DESCRIPTION			REMARK
C476	1-163-031-11	CERAMIC CHIP	0.01MF		50V
C477	1-164-299-11	CERAMIC CHIP	0.22MF	10%	25V
C478	1-124-907-11	ELECT	10MF	20%	50V
C479	1-163-121-00	CERAMIC CHIP	150PF	5%	50V
C482	1-124-472-11	ELECT	470MF	20%	10V
C483	1-163-249-11	CERAMIC CHIP	82PF	5%	50V
C484	1-163-113-00	CERAMIC CHIP	68PF	5%	50V
C485	1-163-113-00	CERAMIC CHIP	68PF	5%	50V
C486	1-163-249-11	CERAMIC CHIP	82PF	5%	50V
C487	1-163-235-11	CERAMIC CHIP	22PF	5%	50V
C488	1-163-097-00	CERAMIC CHIP	15PF	5%	50V
C490	1-164-336-11	CERAMIC CHIP	0.33MF		25V
C491	1-164-336-11	CERAMIC CHIP	0.33MF		25V
C492	1-164-336-11	CERAMIC CHIP	0.33MF		25V
C493	1-104-760-11	CERAMIC CHIP	0.047MF	10%	50V
C494	1-104-760-11	CERAMIC CHIP	0.047MF	10%	50V
C495	1-124-907-11	ELECT	10MF	20%	50V
C496	1-163-249-11	CERAMIC CHIP	82PF	5%	50V
C497	1-163-011-11	CERAMIC CHIP	0.0015MF	10%	50V
C498	1-124-925-11	ELECT	2.2MF	20%	50V
C499	1-163-031-11	CERAMIC CHIP	0.01MF		50V
C500	1-164-004-11	CERAMIC CHIP	0.1MF	10%	25V
C501	1-164-182-11	CERAMIC CHIP	0.0033MF	10%	50V
C502	1-163-141-00	CERAMIC CHIP	0.001MF	5%	50V
C503	1-163-251-11	CERAMIC CHIP	100PF	5%	50V
C504	1-136-175-00	FILM	0.068MF	5%	50V
C505	1-163-135-00	CERAMIC CHIP	560PF	5%	50V
C506	1-124-902-00	ELECT	0.47MF	20%	50V
C507	1-126-375-11	ELECT	100MF	20%	25V
C508	1-130-495-00	MYLAR	0.1MF	5%	50V
C509	1-124-935-11	ELECT	470MF	20%	100V
C511	1-108-700-11	MYLAR	0.047MF	10%	200V
C512	1-124-902-00	ELECT	0.47MF	20%	50V
C513	1-126-096-11	ELECT	10MF	20%	25V
C514	⚠ 1-129-718-00	FILM	0.022MF	10%	630V
C515	1-163-809-11	CERAMIC CHIP	0.047MF	10%	25V
C516	1-102-030-00	CERAMIC	330PF	10%	500V
C517	1-163-024-00	CERAMIC CHIP	0.018MF	10%	50V
C518	1-107-995-51	ELECT	100MF	0	160V
C519	1-163-017-00	CERAMIC CHIP	0.0047MF	10%	50V
C520	1-163-257-11	CERAMIC CHIP	180PF	5%	50V
C521	1-162-114-00	CERAMIC	0.0047MF		2KV
C522	1-126-375-11	ELECT	100MF	20%	25V
C523	1-126-801-11	ELECT	1MF	20%	50V
C525	⚠ 1-136-545-11	FILM	0.0078MF	3%	2KV
C526	⚠ 1-162-116-91	CERAMIC	680PF	10%	2KV
C529	1-104-789-51	ELECT	0.47MF	20%	50V
C530	1-124-120-11	ELECT	220MF	20%	25V
C531	1-124-477-11	ELECT	47MF	20%	25V
C532	1-163-031-11	CERAMIC CHIP	0.01MF		50V
C533	1-102-212-00	CERAMIC	820PF	10%	500V
C534	1-123-948-00	ELECT	22MF	20%	250V
C537	1-124-913-11	ELECT	470MF	20%	50V
C538	1-106-367-00	MYLAR	0.01MF	10%	100V
C539	1-130-480-00	FILM	0.0056MF	5%	50V
C540	1-163-133-00	CERAMIC CHIP	470PF	5%	50V
C541	1-124-927-11	ELECT	4.7MF	20%	50V
C542	1-106-351-00	MYLAR	0.0022MF	10%	100V
C543	1-106-351-00	MYLAR	0.0022MF	10%	100V
C544	1-106-367-00	MYLAR	0.01MF	10%	100V
C545	1-102-212-00	CERAMIC	820PF	10%	500V
C546	1-163-119-00	CERAMIC CHIP	120PF	5%	50V
C547	1-163-251-11	CERAMIC CHIP	100PF	5%	50V
C548	1-102-212-00	CERAMIC	820PF	10%	500V
C549	1-124-667-11	ELECT	10MF	20%	50V
C550	1-126-163-11	ELECT	4.7MF	20%	50V
C551	1-106-375-12	MYLAR	0.022MF	10%	100V
C552	1-126-336-11	ELECT	220MF	20%	25V
C554	1-130-736-11	FILM	0.01MF	5%	50V
C555	1-124-907-11	ELECT	10MF	20%	50V
C556	1-124-907-11	ELECT	10MF	20%	50V
C557	1-106-381-12	MYLAR	0.039MF	10%	100V
C558	1-124-903-11	ELECT	1MF	20%	50V
C559	1-136-173-00	FILM	0.47MF	5%	50V
C561	1-136-159-00	FILM	0.033MF	5%	50V
C562	1-163-249-11	CERAMIC CHIP	82PF	5%	50V
C564	1-124-907-11	ELECT	10MF	20%	50V
C565	1-124-903-11	ELECT	1MF	20%	50V
C566	1-106-367-00	MYLAR	0.01MF	10%	100V
C567	1-136-499-11	FILM	0.047MF	5%	50V
C568	1-124-903-11	ELECT	1MF	20%	50V
C569	1-131-351-00	TANTALUM	4.7MF	10%	25V
C570	1-124-360-00	ELECT	1000MF	20%	16V
C571	1-164-232-11	CERAMIC CHIP	0.01MF	10%	50V
C572	1-104-709-11	ELECT	4.7MF	0	160V
C573	1-136-173-00	FILM	0.47MF	5%	50V
C574	1-249-383-11	CARBON	1.5	5% 1/4W	F
C575	1-163-031-11	CERAMIC CHIP	0.01MF		50V
C576	1-102-244-00	CERAMIC	220PF	10%	500V
C577	1-124-907-11	ELECT	10MF	20%	50V
C578	1-136-540-11	FILM	0.82MF	5%	200V
C579	1-126-804-11	ELECT	100MF	20%	50V
C580	1-136-756-11	FILM	0.24MF	5%	200V
C581	1-124-927-11	ELECT	4.7MF	20%	50V
C582	1-102-002-00	CERAMIC	680PF	10%	500V
C583	1-136-569-11	FILM	1.2MF	5%	200V
C584	1-123-267-00	ELECT	2.2MF	20%	160V
C585	1-124-666-11	ELECT	4.7MF	20%	250V
C586	1-124-557-11	ELECT	1000MF	20%	25V
C587	1-102-030-00	CERAMIC	330PF	10%	500V
C588	1-124-667-11	ELECT	10MF	20%	50V
C589	1-102-030-00	CERAMIC	330PF	10%	500V
C590	1-126-387-11	ELECT	2.2MF	20%	50V
C591	1-106-371-00	MYLAR	0.015MF	10%	200V
C592	1-123-932-00	ELECT	4.7MF	20%	160V
C593	1-165-319-11	CERAMIC CHIP	0.1MF		50V
C594	1-163-229-11	CERAMIC CHIP	12PF	5%	50V
C595	1-126-336-11	ELECT	220MF	20%	25V
C596	1-124-478-11	ELECT	100MF	20%	25V
C597	1-164-346-11	CERAMIC CHIP	1MF		16V
C598	1-164-346-11	CERAMIC CHIP	1MF		16V
C599	1-126-157-11	ELECT	10MF	20%	16V
C1300	1-124-477-11	ELECT	47MF	20%	25V
C1301	1-124-477-11	ELECT	47MF	20%	25V
C1302	1-163-133-00	CERAMIC CHIP	470PF	5%	50V
C1304	1-124-477-11	ELECT	47MF	20%	25V
C1305	1-124-477-11	ELECT	47MF	20%	25V
C1306	1-163-031-11	CERAMIC CHIP	0.01MF		50V
C1307	1-163-031-11	CERAMIC CHIP	0.01MF		50V
C1308	1-124-907-11	ELECT	10MF	20%	50V
C1309	1-163-257-11	CERAMIC CHIP	180PF	5%	50V
C1310	1-163-031-11	CERAMIC CHIP	0.01MF		50V
C1311	1-124-477-11	ELECT	47MF	20%	25V
C1312	1-163-031-11	CERAMIC CHIP	0.01MF		50V
C1313	1-163-031-11	CERAMIC CHIP	0.01MF		50V
C1314	1-124-477-11	ELECT	47MF	20%	25V
C1315	1-124-477-11	ELECT	47MF	20%	25V

A (PVM-1351Q/1354Q)

REF.NO.	PART NO.	DESCRIPTION			REMARK
C1316	1-163-031-11	CERAMIC CHIP 0.01MF			50V
C1317	1-124-477-11	ELECT 47MF	20%		25V
C1318	1-124-477-11	ELECT 47MF	20%		25V
C1319	1-163-037-11	CERAMIC CHIP 0.022MF	10%		25V
C1320	1-124-477-11	ELECT 47MF	20%		25V
C1321	1-124-477-11	ELECT 47MF	20%		25V
C1322	1-124-120-11	ELECT 220MF	20%		16V
C1323	1-163-031-11	CERAMIC CHIP 0.01MF			50V
C1324	1-163-031-11	CERAMIC CHIP 0.01MF			50V
C1325	1-163-031-11	CERAMIC CHIP 0.01MF			50V
C1326	1-124-477-11	ELECT 47MF	20%		25V
C1327	1-163-031-11	CERAMIC CHIP 0.01MF			50V
C1328	1-163-031-11	CERAMIC CHIP 0.01MF			50V
C1329	1-124-907-11	ELECT 10MF	20%		50V
C1330	1-163-031-11	CERAMIC CHIP 0.01MF			50V
C1331	1-124-477-11	ELECT 47MF	20%		25V
C1332	1-124-477-11	ELECT 47MF	20%		25V
C1333	1-124-477-11	ELECT 47MF	20%		25V
C1334	1-163-227-11	CERAMIC CHIP 10PF	0.5PF		50V
C1335	1-124-477-11	ELECT 47MF	20%		25V
C1336	1-124-477-11	ELECT 47MF	20%		25V
C1338	1-163-031-11	CERAMIC CHIP 0.01MF			50V
C1339	1-163-031-11	CERAMIC CHIP 0.01MF			50V
C1340	1-163-031-11	CERAMIC CHIP 0.01MF			50V
C1341	1-163-275-11	CERAMIC CHIP 0.001MF	5%		50V
C1342	1-102-963-00	CERAMIC 33PF	5%		50V
C1343	1-163-113-00	CERAMIC CHIP 68PF	5%		50V
C1344	1-163-083-00	CERAMIC CHIP 1PF	0.25PF		50V
C1345	1-124-907-11	ELECT 10MF	20%		50V
C1346	1-124-477-11	ELECT 47MF	20%		25V
C1347	1-163-031-11	CERAMIC CHIP 0.01MF			50V
C1348	1-163-127-00	CERAMIC CHIP 270PF	5%		50V
C1349	1-163-117-00	CERAMIC CHIP 100PF	5%		50V
C1350	1-164-232-11	CERAMIC CHIP 0.01MF	10%		50V
C1351	1-124-903-11	ELECT 1MF	20%		50V
C1352	1-163-023-00	CERAMIC CHIP 0.015MF	10%		50V
C1353	1-163-031-11	CERAMIC CHIP 0.01MF			50V
C1354	1-163-121-00	CERAMIC CHIP 150PF	5%		50V
C1355	1-163-125-00	CERAMIC CHIP 220PF	5%		50V
C1356	1-163-235-11	CERAMIC CHIP 22PF	5%		50V
C1357	1-124-119-00	ELECT 330MF	20%		16V
C1358	1-124-477-11	ELECT 47MF	20%		25V
C1359	1-163-263-11	CERAMIC CHIP 330PF	5%		50V
C1360	1-164-161-11	CERAMIC CHIP 0.0022MF	10%		50V
C1362	1-163-249-11	CERAMIC CHIP 82PF	5%		50V
C1363	1-163-235-11	CERAMIC CHIP 22PF	5%		50V
C1364	1-163-133-00	CERAMIC CHIP 470PF	5%		50V
C1365	1-163-227-11	CERAMIC CHIP 10PF	0.5PF		50V
C1366	1-124-477-11	ELECT 47MF	20%		25V
C1367	1-124-477-11	ELECT 47MF	20%		25V
C1369	1-163-237-11	CERAMIC CHIP 27PF	5%		50V
C1370	1-163-237-11	CERAMIC CHIP 27PF	5%		50V
C1372	1-124-477-11	ELECT 47MF	20%		25V
C1373	1-124-477-11	ELECT 47MF	20%		25V
C1374	1-124-477-11	ELECT 47MF	20%		25V
C1375	1-124-927-11	ELECT 4.7MF	20%		50V
C1378	1-163-097-00	CERAMIC CHIP 15PF	5%		50V
C1380	1-163-101-00	CERAMIC CHIP 22PF	5%		50V
C1381	1-163-101-00	CERAMIC CHIP 22PF	5%		50V
C1382	1-124-443-00	ELECT 100MF	20%		10V
C1383	1-124-477-11	ELECT 47MF	20%		25V
C1384	1-163-038-00	CERAMIC CHIP 0.1MF			25V
C1385	1-163-031-11	CERAMIC CHIP 0.01MF			50V
C1386	1-163-031-11	CERAMIC CHIP 0.01MF			50V
C1387	1-163-031-11	CERAMIC CHIP 0.01MF			50V
C1393	1-163-251-11	CERAMIC CHIP 100PF	5%		50V
C1400	1-163-031-11	CERAMIC CHIP 0.01MF			50V
C1401	1-136-173-00	FILM 0.47MF	5%		50V
C1402	1-163-031-11	CERAMIC CHIP 0.01MF			50V
C1403	1-136-173-00	FILM 0.47MF	5%		50V
C1404	1-164-299-11	CERAMIC CHIP 0.22MF	10%		25V
C1405	1-163-235-11	CERAMIC CHIP 22PF	5%		50V
C1406	1-163-090-00	CERAMIC CHIP 7PF	0.25PF		50V
C1407	1-163-085-00	CERAMIC CHIP 2PF	0.25PF		50V
C1408	1-163-113-00	CERAMIC CHIP 68PF	5%		50V
C1500	1-124-473-11	ELECT 1000MF	20%		10V
C1501	1-124-472-11	ELECT 470MF	20%		10V
C1502	1-101-821-00	CERAMIC 0.0022MF			500V
C1503	1-164-004-11	CERAMIC CHIP 0.1MF	10%		25V
C1504	1-124-907-11	ELECT 10MF	20%		50V
C1505	1-136-165-00	FILM 0.1MF	5%		50V
C1506	1-124-119-00	ELECT 330MF	20%		16V
C1507	1-163-141-00	CERAMIC CHIP 0.001MF	5%		50V
C1508	1-124-927-11	ELECT 4.7MF	20%		50V
C1509	1-124-907-11	ELECT 10MF	20%		50V
C1510	1-124-927-11	ELECT 4.7MF	20%		50V
C1511	1-164-182-11	CERAMIC CHIP 0.0033MF	10%		50V
C1512	1-124-927-11	ELECT 4.7MF	20%		50V
C1513	1-163-133-00	CERAMIC CHIP 470PF	5%		50V
C1514	1-130-477-00	MYLAR 0.0033MF	5%		50V
C1515	1-124-907-11	ELECT 10MF	20%		50V
C1516	1-163-063-00	CERAMIC CHIP 0.022MF	10%		50V
C1517	1-126-101-11	ELECT 100MF	20%		10V
C1518	1-124-477-11	ELECT 47MF	20%		16V
C1519	1-163-037-11	CERAMIC CHIP 0.022MF	10%		25V
C1521	1-163-243-11	CERAMIC CHIP 47PF	5%		50V

<CONNECTOR>

CN101	*1-573-979-11	CONNECTOR, BOARD TO BOARD 11P
CN102	*1-564-514-11	PLUG, CONNECTOR 11P
CN104	*1-564-506-11	PLUG, CONNECTOR 3P
CN105	*1-565-503-11	CONNECTOR, BOARD TO BOARD 12P
CN201	*1-564-506-11	PLUG, CONNECTOR 3P
CN301	*1-564-514-11	PLUG, CONNECTOR 11P
CN302	*1-564-510-11	PLUG, CONNECTOR 7P
CN303	*1-564-515-11	PLUG, CONNECTOR 12P
CN304	*1-564-509-11	PLUG, CONNECTOR 6P
CN305	*1-565-504-11	CONNECTOR, BOARD TO BOARD 13P
CN401	*1-564-511-51	PLUG, CONNECTOR 8P
CN402	*1-564-515-11	PLUG, CONNECTOR 12P
CN501	*1-580-798-11	CONNECTOR PIN (DY) 6P
CN502	*1-573-964-11	PIN, CONNECTOR (PC BOARD) 6P
CN503	*1-573-964-11	PIN, CONNECTOR (PC BOARD) 6P
CN504	*1-564-508-11	PLUG, CONNECTOR 5P
CN505	*1-564-506-11	PLUG, CONNECTOR 3P
CN506	*1-564-506-11	PLUG, CONNECTOR 3P
CN507	*1-535-419-00	TAB, FASTEN (PCB)

<COMPOSITION CIRCUIT BLOCK>

CP300	1-236-366-11	MODULE, TRAP
CP301	1-236-365-11	MODULE, TRAP
CP302	1-808-654-21	MODULE
CP303	1-466-162-61	FILTER BLOCK, COM (CFB-4)

<DIODE>

D101	8-719-800-76	DIODE 1SS226

A (PVM-1351Q/1354Q)

REF.NO.	PART NO.	DESCRIPTION	REMARK
D102	8-719-800-76	DIODE 1SS226	
D103	8-719-045-70	DIODE 1SV230TPH3	
D104	8-719-800-76	DIODE 1SS226	
D105	8-719-800-76	DIODE 1SS226	
D107	8-719-800-76	DIODE 1SS226	
D109	8-719-801-78	DIODE 1SS184	
D110	8-719-404-46	DIODE MA110	
D112	8-719-404-46	DIODE MA110	
D113	8-719-158-07	DIODE RD4.7SB	
D114	8-719-404-46	DIODE MA110	
D200	8-719-977-46	DIODE DTZ13C	
D300	8-719-025-07	DIODE 1SV232-TPH3	
D301	8-719-404-46	DIODE MA110	
D302	8-719-158-07	DIODE RD4.7SB	
D303	8-719-977-05	DIODE DTZ6.2	
D304	8-719-801-78	DIODE 1SS184	
D305	8-719-800-76	DIODE 1SS226	
D306	8-719-104-34	DIODE 1S2836	
D307	8-719-404-46	DIODE MA110	
D309	8-719-404-46	DIODE MA110	
D310	8-719-104-34	DIODE 1S2836	
D311	8-719-045-70	DIODE 1SV230TPH3	
D313	8-719-801-78	DIODE 1SS184	
D314	8-719-404-46	DIODE MA110	
D315	8-719-404-46	DIODE MA110	
D317	8-719-404-46	DIODE MA110	
D318	8-719-800-76	DIODE 1SS226	
D319	8-719-800-76	DIODE 1SS226	
D320	8-719-404-46	DIODE MA110	
D322	8-719-404-46	DIODE MA110	
D323	8-719-404-46	DIODE MA110	
D324	8-719-045-70	DIODE 1SV230TPH3	
D325	8-719-801-78	DIODE 1SS184	
D326	8-719-045-70	DIODE 1SV230TPH3	
D327	8-719-104-34	DIODE 1S2836	
D332	8-719-404-46	DIODE MA110	
D333	8-719-404-46	DIODE MA110	
D335	8-719-404-46	DIODE MA110	
D336	8-719-404-46	DIODE MA110	
D337	8-719-404-46	DIODE MA110	
D338	8-719-404-46	DIODE MA110	
D339	8-719-404-46	DIODE MA110	
D341	8-719-158-07	DIODE RD4.7SB	
D344	8-719-801-78	DIODE 1SS184	
D345	8-719-104-34	DIODE 1S2836	
D346	8-719-104-34	DIODE 1S2836	
D347	8-719-104-34	DIODE 1S2836	
D348	8-719-800-76	DIODE 1SS226	
D349	8-719-800-76	DIODE 1SS226	
D350	8-719-800-76	DIODE 1SS226	
D351	8-719-800-76	DIODE 1SS226	
D352	8-719-800-76	DIODE 1SS226	
D353	8-719-800-76	DIODE 1SS226	
D354	8-719-800-76	DIODE 1SS226	
D355	8-719-800-76	DIODE 1SS226	
D360	8-719-104-34	DIODE 1S2836	
D361	8-719-104-34	DIODE 1S2836	
D362	8-719-158-40	DIODE RD10SB1	
D363	8-719-158-40	DIODE RD10SB1	
D364	8-719-104-34	DIODE 1S2836	
D365	8-719-404-46	DIODE MA110	
D381	8-719-404-46	DIODE MA110	
D401	8-719-404-46	DIODE MA110	
D404	8-719-800-76	DIODE 1SS226	
D405	8-719-801-78	DIODE 1SS184	
D406	8-719-404-46	DIODE MA110	
D407	8-719-404-46	DIODE MA110	
D408	8-719-404-46	DIODE MA110	
D410	8-719-404-46	DIODE MA110	
D411	8-719-404-46	DIODE MA110	
D414	8-719-801-78	DIODE 1SS184	
D415	8-719-801-78	DIODE 1SS184	
D416	8-719-801-78	DIODE 1SS184	
D417	8-719-801-78	DIODE 1SS184	
D418	8-719-801-78	DIODE 1SS184	
D421	8-719-404-46	DIODE MA110	
D422	8-719-404-46	DIODE MA110	
D423	8-719-800-76	DIODE 1SS226	
D424	8-719-404-46	DIODE MA110	
D425	8-719-800-76	DIODE 1SS226	
D426	8-719-158-07	DIODE RD4.7SB	
D427	8-719-404-46	DIODE MA110	
D500	8-719-404-46	DIODE MA110	
D501	8-719-977-03	DIODE DTZ5.6B	
D502	8-719-979-80	DIODE UF5406	
D503	8-719-404-46	DIODE MA110	
D504	8-719-901-83	DIODE 1SS83	
D505	8-719-028-72	DIODE RGP02-17EL-6433	
D506	8-719-945-80	DIODE ERC06-15S	
D507	8-719-800-76	DIODE 1SS226	
D508	8-719-800-76	DIODE 1SS226	
D509	8-719-404-46	DIODE MA110	
D510	8-719-302-43	DIODE EL1Z	
D512	8-719-979-80	DIODE UF5406	
D513	8-719-404-46	DIODE MA110	
D514	8-719-971-20	DIODE ERC38-06	
D515	8-719-971-20	DIODE ERC38-06	
D516	8-719-404-46	DIODE MA110	
D517	8-719-404-46	DIODE MA110	
D518	8-719-404-46	DIODE MA110	
D519	8-719-404-46	DIODE MA110	
D520	8-719-801-78	DIODE 1SS184	
D521	8-719-901-33	DIODE 1SS133	
D522	8-719-977-05	DIODE DTZ6.2	
D523	8-719-404-46	DIODE MA110	
D524	8-719-200-02	DIODE 10E-2	
D525	8-719-200-02	DIODE 10E-2	
D526	8-719-404-46	DIODE MA110	
D527	8-719-200-02	DIODE 10E-2	
D528	8-719-300-76	DIODE RH-1A	
D529	8-719-200-02	DIODE 10E-2	
D530	8-719-300-76	DIODE RH-1A	
D531	8-719-977-32	DIODE DTZ11B	
D532	8-719-800-76	DIODE 1SS226	
D533	8-719-302-43	DIODE EL1Z	
D534	8-719-404-46	DIODE MA110	
D535	8-719-404-46	DIODE MA110	
D536	8-719-800-76	DIODE 1SS226	
D537	8-719-800-76	DIODE 1SS226	
D538	8-719-800-76	DIODE 1SS226	
D539	8-719-404-46	DIODE MA110	
D540	8-719-404-46	DIODE MA110	
D541	8-719-801-78	DIODE 1SS184	
D542	8-719-901-33	DIODE 1SS133	
		<DELAY LINE>	
DL300	1-415-633-11	DELAY LINE, Y	

A (PVM-1351Q/1354Q)

Les composants identifies par une trame et une marque ⚠ sont critiques pour la securite. Ne les remplacer que par une piece portant le numero specifie.

The components identified by shading and mark ⚠ are critical for safety. Replace only with part number specified.

REF.NO.	PART NO.	DESCRIPTION	REMARK
DL301	1-415-632-11	DELAY LINE, Y	
DL401	1-409-547-11	DELAY LINE	
		<FILTER>	
FL300	1-236-547-11	TRAP, LC	
FL401	1-236-364-11	FILTER, BAND PASS	
		<IC>	
IC101	8-759-196-71	IC UPD78013YCW-Y03	
IC102	8-759-168-37	IC ST24C01B1	
IC103	8-759-008-48	IC MC74HC86F	
IC104	8-759-262-59	IC UPD6451AGT-632-E2	
IC105	8-759-196-70	IC M62358FP-E1	
IC106	8-759-196-70	IC M62358FP-E1	
IC107	8-759-196-70	IC M62358FP-E1	
IC108	8-759-042-02	IC S-80743AL-A7-S	
IC109	8-759-196-70	IC M62358FP-E1	
IC110	8-759-196-70	IC M62358FP-E1	
IC111	8-759-009-22	IC MC14094BF	
IC200	8-759-420-04	IC AN5265	
IC301	8-752-053-21	IC CXA1211M	
IC302	8-759-998-98	IC LM358D	
IC303	8-752-056-67	IC CXA1214P	
IC304	8-759-509-19	IC XRU4053BF-E2	
IC305	8-759-631-08	IC M51279FP	
IC306	8-759-711-32	IC NJM2245M	
IC309	8-759-711-32	IC NJM2245M	
IC310	8-759-509-19	IC XRU4053BF-E2	
IC311	8-759-509-05	IC XRU4066BF	
IC312	8-759-711-32	IC NJM2245M	
IC313	8-759-501-21	IC MM1149XF	
IC314	8-759-501-21	IC MM1149XF	
IC315	8-759-509-19	IC XRU4053BF-E2	
IC316	8-759-048-09	IC MM1148XF	
IC317	8-759-009-51	IC MC14538BF	
IC318	8-759-509-57	IC XRU4584BF	
IC320	8-759-501-21	IC MM1149XF	
IC321	8-759-501-21	IC MM1149XF	
IC322	8-759-501-21	IC MM1149XF	
IC323	8-759-501-21	IC MM1149XF	
IC324	8-759-501-21	IC MM1149XF	
IC325	8-759-501-21	IC MM1149XF	
IC326	8-759-998-96	IC LM324D	
IC350	8-759-100-96	IC UPC4558G2	
IC401	8-759-196-69	IC BA7655AF-E2	
IC402	8-752-053-21	IC CXA1211M	
IC403	8-759-509-05	IC XRU4066BF	
IC404	8-752-052-62	IC CXA1478S	
IC405	8-759-509-19	IC XRU4053BF-E2	
IC406	8-759-998-98	IC LM358D	
IC407	8-759-509-05	IC XRU4066BF	
IC408	8-759-509-91	IC XRA10393F	
IC409	8-759-998-96	IC LM324D	
IC410	8-759-932-64	IC BU4052BF	
IC411	8-759-008-92	IC MC14024BF	
IC412	8-759-509-19	IC XRU4053BF-E2	
IC413	8-759-509-19	IC XRU4053BF-E2	
IC500	8-749-010-07	IC H8D7248	
IC502	8-759-009-51	IC MC14538BF	
IC503	8-759-009-51	IC MC14538BF	
IC504	8-752-053-21	IC CXA1211M	
IC505	8-759-520-07	IC XRA17812T	
IC506	8-759-009-51	IC MC14538BF	
IC507	8-759-100-60	IC UPC1377C	
IC508	8-752-053-21	IC CXA1211M	
IC509	8-759-998-98	IC LM358D	
IC510	8-759-009-51	IC MC14538BF	
		<COIL>	
L101	1-408-609-41	INDUCTOR 33UH	
L102	1-408-417-00	INDUCTOR 47UH	
L104	1-410-478-11	INDUCTOR 47UH	
L105	1-410-482-31	INDUCTOR 100UH	
L300	1-410-478-11	INDUCTOR 47UH	
L301	1-408-411-00	INDUCTOR 15UH	
L302	1-412-008-31	INDUCTOR CHIP 15UH	
L303	1-408-416-00	INDUCTOR 39UH	
L304	1-412-008-31	INDUCTOR CHIP 15UH	
L305	1-410-196-11	INDUCTOR CHIP 2.2UH	
L306	1-408-416-00	INDUCTOR 39UH	
L307	1-408-411-00	INDUCTOR 15UH	
L308	1-410-466-41	INDUCTOR 4.7UH	
L309	1-410-470-11	INDUCTOR 10UH	
L311	1-410-470-11	INDUCTOR 10UH	
L312	1-412-011-31	INDUCTOR CHIP 27UH	
L314	1-412-011-31	INDUCTOR CHIP 27UH	
L316	1-412-011-31	INDUCTOR CHIP 27UH	
L317	1-410-090-41	INDUCTOR 18MMH	
L319	1-408-421-00	INDUCTOR 100UH	
L320	1-410-478-11	INDUCTOR 47UH	
L401	1-410-478-11	INDUCTOR 47UH	
L402	1-410-216-31	INDUCTOR CHIP 100UH	
L403	1-410-216-31	INDUCTOR CHIP 100UH	
L404	1-410-216-31	INDUCTOR CHIP 100UH	
L405	1-408-419-00	INDUCTOR 68UH	
L406	1-408-419-00	INDUCTOR 68UH	
L407	1-408-413-00	INDUCTOR 22UH	
L408	1-408-413-00	INDUCTOR 22UH	
L409	1-410-214-31	INDUCTOR CHIP 68UH	
L500	1-459-155-00	COIL (WITH CORE) 45UH	
L501	1-407-365-00	COIL, CHOKE	
L502	1-407-365-00	COIL, CHOKE	
L503	1-410-093-11	INDUCTOR 33MMH	
L504	1-410-666-31	INDUCTOR 18UH	
L505	1-410-671-31	INDUCTOR 47UH	
L507	1-410-686-11	INDUCTOR 1MMH	
L508	1-412-530-31	INDUCTOR 27UH	
L509	1-459-075-00	COIL, DYNAMIC CONVERSION CHOKE	
L511	1-459-106-00	COIL, DUST CORE	
L512 ⚠	1-459-155-00	COIL (WITH CORE) 45UH	
L513	1-412-447-11	INDUCTOR 3.9MMH	
L514	1-459-104-00	COIL, DUST CORE	
L515	1-459-059-00	COIL, DUST CORE	
L516 ⚠	1-459-760-13	COIL, HORIZONTAL LINEARITY	
L517	1-412-547-21	INDUCTOR 680UH	
		<NEON LAMP>	
NL500	1-519-526-11	LAMP, NEON	
		<TRANSISTOR>	
Q101	8-729-901-01	TRANSISTOR DTC144EK	
Q102	8-729-216-22	TRANSISTOR 2SA1162-G	

A (PVM-1351Q/1354Q)

REF.NO.	PART NO.	DESCRIPTION	REMARK
Q103	8-729-216-22	TRANSISTOR 2SA1162-G	
Q104	8-729-907-26	TRANSISTOR IMX1	
Q105	8-729-901-06	TRANSISTOR DTA144EK	
Q107	8-729-901-06	TRANSISTOR DTA144EK	
Q108	8-729-120-28	TRANSISTOR 2SC1623-L5L6	
Q109	8-729-120-28	TRANSISTOR 2SC1623-L5L6	
Q110	8-729-120-28	TRANSISTOR 2SC1623-L5L6	
Q111	8-729-901-06	TRANSISTOR DTA144EK	
Q112	8-729-120-28	TRANSISTOR 2SC1623-L5L6	
Q113	8-729-120-28	TRANSISTOR 2SC1623-L5L6	
Q114	8-729-119-78	TRANSISTOR 2SC2785-HFE	
Q200	8-729-140-96	TRANSISTOR 2SD774-34	
Q201	8-729-120-28	TRANSISTOR 2SC1623-L5L6	
Q300	8-729-120-28	TRANSISTOR 2SC1623-L5L6	
Q301	8-729-120-28	TRANSISTOR 2SC1623-L5L6	
Q302	8-729-216-22	TRANSISTOR 2SA1162-G	
Q303	8-729-120-28	TRANSISTOR 2SC1623-L5L6	
Q304	8-729-120-28	TRANSISTOR 2SC1623-L5L6	
Q305	8-729-120-28	TRANSISTOR 2SC1623-L5L6	
Q306	8-729-120-28	TRANSISTOR 2SC1623-L5L6	
Q307	8-729-120-28	TRANSISTOR 2SC1623-L5L6	
Q308	8-729-120-28	TRANSISTOR 2SC1623-L5L6	
Q309	8-729-216-22	TRANSISTOR 2SA1162-G	
Q310	8-729-216-22	TRANSISTOR 2SA1162-G	
Q311	8-729-216-22	TRANSISTOR 2SA1162-G	
Q312	8-729-120-28	TRANSISTOR 2SC1623-L5L6	
Q313	8-729-216-22	TRANSISTOR 2SA1162-G	
Q314	8-729-901-06	TRANSISTOR DTA144EK	
Q315	8-729-216-22	TRANSISTOR 2SA1162-G	
Q316	8-729-120-28	TRANSISTOR 2SC1623-L5L6	
Q318	8-729-216-22	TRANSISTOR 2SA1162-G	
Q319	8-729-120-28	TRANSISTOR 2SC1623-L5L6	
Q320	8-729-119-78	TRANSISTOR 2SC2785-HFE	
Q321	8-729-120-28	TRANSISTOR 2SC1623-L5L6	
Q322	8-729-120-28	TRANSISTOR 2SC1623-L5L6	
Q323	8-729-901-01	TRANSISTOR DTC144EK	
Q324	8-729-901-01	TRANSISTOR DTC144EK	
Q325	8-729-120-28	TRANSISTOR 2SC1623-L5L6	
Q326	8-729-120-28	TRANSISTOR 2SC1623-L5L6	
Q327	8-729-216-22	TRANSISTOR 2SA1162-G	
Q328	8-729-141-53	TRANSISTOR 2SK94-X2X3X4	
Q329	8-729-141-53	TRANSISTOR 2SK94-X2X3X4	
Q330	8-729-216-22	TRANSISTOR 2SA1162-G	
Q331	8-729-216-22	TRANSISTOR 2SA1162-G	
Q332	8-729-901-01	TRANSISTOR DTC144EK	
Q333	8-729-120-28	TRANSISTOR 2SC1623-L5L6	
Q334	8-729-216-22	TRANSISTOR 2SA1162-G	
Q335	8-729-120-28	TRANSISTOR 2SC1623-L5L6	
Q336	8-729-109-44	TRANSISTOR 2SK94-X4	
Q337	8-729-120-28	TRANSISTOR 2SC1623-L5L6	
Q338	8-729-120-28	TRANSISTOR 2SC1623-L5L6	
Q339	8-729-216-22	TRANSISTOR 2SA1162-G	
Q341	8-729-920-39	TRANSISTOR IMT1US	
Q342	8-729-920-39	TRANSISTOR IMT1US	
Q343	8-729-920-39	TRANSISTOR IMT1US	
Q345	8-729-120-28	TRANSISTOR 2SC1623-L5L6	
Q346	8-729-120-28	TRANSISTOR 2SC1623-L5L6	
Q347	8-729-901-01	TRANSISTOR DTC144EK	
Q348	8-729-216-22	TRANSISTOR 2SA1162-G	
Q349	8-729-216-22	TRANSISTOR 2SA1162-G	
Q350	8-729-216-22	TRANSISTOR 2SA1162-G	
Q351	8-729-120-28	TRANSISTOR 2SC1623-L5L6	
Q352	8-729-120-28	TRANSISTOR 2SC1623-L5L6	
Q353	8-729-120-28	TRANSISTOR 2SC1623-L5L6	
Q354	8-729-120-28	TRANSISTOR 2SC1623-L5L6	
Q355	8-729-120-28	TRANSISTOR 2SC1623-L5L6	
Q356	8-729-901-01	TRANSISTOR DTC144EK	
Q357	8-729-120-28	TRANSISTOR 2SC1623-L5L6	
Q358	8-729-120-28	TRANSISTOR 2SC1623-L5L6	
Q359	8-729-216-22	TRANSISTOR 2SA1162-G	
Q360	8-729-907-26	TRANSISTOR IMX1	
Q361	8-729-901-06	TRANSISTOR DTA144EK	
Q362	8-729-120-28	TRANSISTOR 2SC1623-L5L6	
Q363	8-729-120-28	TRANSISTOR 2SC1623-L5L6	
Q364	8-729-901-01	TRANSISTOR DTC144EK	
Q365	8-729-901-01	TRANSISTOR DTC144EK	
Q366	8-729-216-22	TRANSISTOR 2SA1162-G	
Q367	8-729-216-22	TRANSISTOR 2SA1162-G	
Q368	8-729-216-22	TRANSISTOR 2SA1162-G	
Q369	8-729-901-06	TRANSISTOR DTA144EK	
Q372	8-729-901-01	TRANSISTOR DTC144EK	
Q376	8-729-901-01	TRANSISTOR DTC144EK	
Q377	8-729-901-01	TRANSISTOR DTC144EK	
Q378	8-729-901-06	TRANSISTOR DTA144EK	
Q401	8-729-120-28	TRANSISTOR 2SC1623-L5L6	
Q402	8-729-120-28	TRANSISTOR 2SC1623-L5L6	
Q403	8-729-901-01	TRANSISTOR DTC144EK	
Q404	8-729-216-22	TRANSISTOR 2SA1162-G	
Q405	8-729-216-22	TRANSISTOR 2SA1162-G	
Q406	8-729-120-28	TRANSISTOR 2SC1623-L5L6	
Q407	8-729-120-28	TRANSISTOR 2SC1623-L5L6	
Q408	8-729-216-22	TRANSISTOR 2SA1162-G	
Q409	8-729-216-22	TRANSISTOR 2SA1162-G	
Q410	8-729-907-26	TRANSISTOR IMX1	
Q411	8-729-120-28	TRANSISTOR 2SC1623-L5L6	
Q412	8-729-216-22	TRANSISTOR 2SA1162-G	
Q413	8-729-141-53	TRANSISTOR 2SK94-X2X3X4	
Q414	8-729-216-22	TRANSISTOR 2SA1162-G	
Q415	8-729-216-22	TRANSISTOR 2SA1162-G	
Q416	8-729-216-22	TRANSISTOR 2SA1162-G	
Q417	8-729-216-22	TRANSISTOR 2SA1162-G	
Q418	8-729-120-28	TRANSISTOR 2SC1623-L5L6	
Q419	8-729-216-22	TRANSISTOR 2SA1162-G	
Q420	8-729-216-22	TRANSISTOR 2SA1162-G	
Q421	8-729-901-01	TRANSISTOR DTC144EK	
Q422	8-729-120-28	TRANSISTOR 2SC1623-L5L6	
Q423	8-729-120-28	TRANSISTOR 2SC1623-L5L6	
Q424	8-729-901-01	TRANSISTOR DTC144EK	
Q425	8-729-901-01	TRANSISTOR DTC144EK	
Q426	8-729-901-01	TRANSISTOR DTC144EK	
Q428	8-729-216-22	TRANSISTOR 2SA1162-G	
Q429	8-729-216-22	TRANSISTOR 2SA1162-G	
Q430	8-729-120-28	TRANSISTOR 2SC1623-L5L6	
Q431	8-729-120-28	TRANSISTOR 2SC1623-L5L6	
Q432	8-729-120-28	TRANSISTOR 2SC1623-L5L6	
Q433	8-729-901-01	TRANSISTOR DTC144EK	
Q434	8-729-120-28	TRANSISTOR 2SC1623-L5L6	
Q435	8-729-901-01	TRANSISTOR DTC144EK	
Q436	8-729-901-01	TRANSISTOR DTC144EK	
Q437	8-729-901-01	TRANSISTOR DTC144EK	
Q438	8-729-120-28	TRANSISTOR 2SC1623-L5L6	
Q439	8-729-216-22	TRANSISTOR 2SA1162-G	
Q440	8-729-120-28	TRANSISTOR 2SC1623-L5L6	
Q441	8-729-141-53	TRANSISTOR 2SK94-X2X3X4	
Q442	8-729-120-28	TRANSISTOR 2SC1623-L5L6	
Q443	8-729-216-22	TRANSISTOR 2SA1162-G	
Q444	8-729-120-28	TRANSISTOR 2SC1623-L5L6	

A (PVM-1351Q/1354Q)

REF.NO.	PART NO.	DESCRIPTION				REMARK
Q445	8-729-901-01	TRANSISTOR DTC144EK				
Q500	8-729-216-22	TRANSISTOR 2SA1162-G				
Q501	8-729-800-35	TRANSISTOR 2SD1397-CA				
Q502	8-729-119-80	TRANSISTOR 2SC2688-LK				
Q503	8-729-313-42	TRANSISTOR 2SD1134-C				
Q505	8-729-120-28	TRANSISTOR 2SC1623-L5L6				
Q506	8-729-120-28	TRANSISTOR 2SC1623-L5L6				
Q507	8-729-120-28	TRANSISTOR 2SC1623-L5L6				
Q508	8-729-216-22	TRANSISTOR 2SA1162-G				
Q509	8-729-901-06	TRANSISTOR DTA144EK				
Q510	8-729-900-89	TRANSISTOR DTC144ES				
Q511	8-729-120-28	TRANSISTOR 2SC1623-L5L6				
Q512	8-729-195-82	TRANSISTOR 2SC2958-L				
Q513	8-729-122-03	TRANSISTOR 2SA1220A-P				
Q514	8-729-901-00	TRANSISTOR DTC124EK				
Q515	8-729-169-02	TRANSISTOR 2SC2690A-Q				
Q517	8-729-901-06	TRANSISTOR DTA144EK				
Q518	8-729-901-01	TRANSISTOR DTC144EK				
Q519	8-729-901-01	TRANSISTOR DTC144EK				
Q520	8-729-905-67	TRANSISTOR 2SD1944-K				
Q522	8-729-120-28	TRANSISTOR 2SC1623-L5L6				
Q523	8-729-120-28	TRANSISTOR 2SC1623-L5L6				
Q524	8-729-119-78	TRANSISTOR 2SC2785-HFE				
Q525	8-729-119-76	TRANSISTOR 2SA1175-HFE				
Q526	8-729-216-22	TRANSISTOR 2SA1162-G				
Q527	8-729-120-28	TRANSISTOR 2SC1623-L5L6				
		<RESISTOR>				
JR122	1-216-295-00	METAL GLAZE	0	5%	1/10W	
JR123	1-216-295-00	METAL GLAZE	0	5%	1/10W	
JR302	1-216-295-00	METAL GLAZE	0	5%	1/10W	
R101	1-216-025-00	METAL GLAZE	100	5%	1/10W	
R102	1-216-025-00	METAL GLAZE	100	5%	1/10W	
R103	1-216-025-00	METAL GLAZE	100	5%	1/10W	
R104	1-216-073-00	METAL GLAZE	10K	5%	1/10W	
R105	1-216-059-00	METAL GLAZE	2.7K	5%	1/10W	
R106	1-216-065-00	METAL GLAZE	4.7K	5%	1/10W	
R107	1-216-065-00	METAL GLAZE	4.7K	5%	1/10W	
R108	1-216-065-00	METAL GLAZE	4.7K	5%	1/10W	
R109	1-216-065-00	METAL GLAZE	4.7K	5%	1/10W	
R110	1-216-073-00	METAL GLAZE	10K	5%	1/10W	
R111	1-216-295-00	METAL GLAZE	0	5%	1/10W	
R112	1-216-295-00	METAL GLAZE	0	5%	1/10W	
R113	1-216-085-00	METAL GLAZE	33K	5%	1/10W	
R114	1-216-295-00	METAL GLAZE	0	5%	1/10W	
R115	1-216-295-00	METAL GLAZE	0	5%	1/10W	
R116	1-218-761-11	METAL CHIP	240K	0.50%	1/10W	
R117	1-216-089-91	METAL GLAZE	47K	5%	1/10W	
R118	1-216-295-00	METAL GLAZE	0	5%	1/10W	
R119	1-216-689-11	METAL GLAZE	39K	5%	1/10W	
R120	1-216-295-00	METAL GLAZE	0	5%	1/10W	
R121	1-216-295-00	METAL GLAZE	0	5%	1/10W	
R122	1-216-295-00	METAL GLAZE	0	5%	1/10W	
R123	1-216-295-00	METAL GLAZE	0	5%	1/10W	
R124	1-216-295-00	METAL GLAZE	0	5%	1/10W	
R125	1-216-295-00	METAL GLAZE	0	5%	1/10W	
R126	1-216-295-00	METAL GLAZE	0	5%	1/10W	
R127	1-216-295-00	METAL GLAZE	0	5%	1/10W	
R128	1-216-295-00	METAL GLAZE	0	5%	1/10W	
R129	1-216-295-00	METAL GLAZE	0	5%	1/10W	
R130	1-216-099-00	METAL GLAZE	120K	5%	1/10W	
R131	1-216-295-00	METAL GLAZE	0	5%	1/10W	
R132	1-216-065-00	METAL GLAZE	4.7K	5%	1/10W	
R133	1-216-091-00	METAL GLAZE	56K	5%	1/10W	
R134	1-216-065-00	METAL GLAZE	4.7K	5%	1/10W	
R135	1-216-085-00	METAL GLAZE	33K	5%	1/10W	
R136	1-216-295-00	METAL GLAZE	0	5%	1/10W	
R137	1-216-065-00	METAL GLAZE	4.7K	5%	1/10W	
R138	1-216-295-00	METAL GLAZE	0	5%	1/10W	
R139	1-216-295-00	METAL GLAZE	0	5%	1/10W	
R140	1-216-033-00	METAL GLAZE	220	5%	1/10W	
R141	1-216-085-00	METAL GLAZE	33K	5%	1/10W	
R142	1-216-295-00	METAL GLAZE	0	5%	1/10W	
R143	1-216-295-00	METAL GLAZE	0	5%	1/10W	
R144	1-216-295-00	METAL GLAZE	0	5%	1/10W	
R145	1-216-295-00	METAL GLAZE	0	5%	1/10W	
R147	1-216-295-00	METAL GLAZE	0	5%	1/10W	
R148	1-216-295-00	METAL GLAZE	0	5%	1/10W	
R149	1-216-065-00	METAL GLAZE	4.7K	5%	1/10W	
R150	1-216-295-00	METAL GLAZE	0	5%	1/10W	
R151	1-216-061-00	METAL GLAZE	3.3K	5%	1/10W	
R152	1-216-295-00	METAL GLAZE	0	5%	1/10W	
R153	1-216-295-00	METAL GLAZE	0	5%	1/10W	
R154	1-216-065-00	METAL GLAZE	4.7K	5%	1/10W	
R155	1-249-434-11	CARBON	27K	5%	1/4W	
R156	1-216-295-00	METAL GLAZE	0	5%	1/10W	
R157	1-216-065-00	METAL GLAZE	4.7K	5%	1/10W	
R158	1-216-295-00	METAL GLAZE	0	5%	1/10W	
R159	1-216-063-00	METAL GLAZE	3.9K	5%	1/10W	
R160	1-216-061-00	METAL GLAZE	3.3K	5%	1/10W	
R162	1-216-065-00	METAL GLAZE	4.7K	5%	1/10W	
R163	1-216-065-00	METAL GLAZE	4.7K	5%	1/10W	
R164	1-216-067-00	METAL GLAZE	5.6K	5%	1/10W	
R165	1-216-295-00	METAL GLAZE	0	5%	1/10W	
R167	1-216-061-00	METAL GLAZE	3.3K	5%	1/10W	
R168	1-216-085-00	METAL GLAZE	33K	5%	1/10W	
R169	1-216-107-00	METAL GLAZE	270K	5%	1/10W	
R170	1-216-295-00	METAL GLAZE	0	5%	1/10W	
R171	1-216-031-00	METAL GLAZE	180	5%	1/10W	
R172	1-216-295-00	METAL GLAZE	0	5%	1/10W	
R173	1-216-295-00	METAL GLAZE	0	5%	1/10W	
R174	1-216-295-00	METAL GLAZE	0	5%	1/10W	
R175	1-216-295-00	METAL GLAZE	0	5%	1/10W	
R177	1-216-065-00	METAL GLAZE	4.7K	5%	1/10W	
R180	1-216-295-00	METAL GLAZE	0	5%	1/10W	
R181	1-216-065-00	METAL GLAZE	4.7K	5%	1/10W	
R183	1-216-295-00	METAL GLAZE	0	5%	1/10W	
R184	1-216-295-00	METAL GLAZE	0	5%	1/10W	
R185	1-216-073-00	METAL GLAZE	10K	5%	1/10W	
R186	1-216-295-00	METAL GLAZE	0	5%	1/10W	
R187	1-216-061-00	METAL GLAZE	3.3K	5%	1/10W	
R188	1-216-295-00	METAL GLAZE	0	5%	1/10W	
R189	1-216-073-00	METAL GLAZE	10K	5%	1/10W	
R190	1-216-049-00	METAL GLAZE	1K	5%	1/10W	
R192	1-216-073-00	METAL GLAZE	10K	5%	1/10W	
R193	1-216-295-00	METAL GLAZE	0	5%	1/10W	
R194	1-216-295-00	METAL GLAZE	0	5%	1/10W	
R195	1-216-071-00	METAL GLAZE	8.2K	5%	1/10W	
R197	1-216-061-00	METAL GLAZE	3.3K	5%	1/10W	
R198	1-216-295-00	METAL GLAZE	0	5%	1/10W	
R199	1-216-295-00	METAL GLAZE	0	5%	1/10W	
R200	1-216-684-11	METAL CHIP	24K	0.50%	1/10W	
R201	1-216-049-00	METAL GLAZE	1K	5%	1/10W	
R202	1-212-857-00	FUSIBLE	10	5%	1/4W	F
R203	1-260-095-11	CARBON	470	5%	1/2W	
R204	1-260-072-11	CARBON	4.7	5%	1/2W	
R205	1-216-647-11	METAL CHIP	680	0.50%	1/10W	
R206	1-216-073-00	METAL GLAZE	10K	5%	1/10W	

A (PVM-1351Q/1354Q)

REF.NO.	PART NO.	DESCRIPTION				REMARK
R207	1-216-065-00	METAL GLAZE	4.7K	5%	1/10W	
R208	1-216-065-00	METAL GLAZE	4.7K	5%	1/10W	
R209	1-216-073-00	METAL GLAZE	10K	5%	1/10W	
R210	1-216-061-00	METAL GLAZE	3.3K	5%	1/10W	
R211	1-249-393-11	CARBON	10	5%	1/4W	F
R237	1-216-089-91	METAL GLAZE	47K	5%	1/10W	
R301	1-216-025-00	METAL GLAZE	100	5%	1/10W	
R302	1-216-025-00	METAL GLAZE	100	5%	1/10W	
R303	1-216-025-00	METAL GLAZE	100	5%	1/10W	
R304	1-216-025-00	METAL GLAZE	100	5%	1/10W	
R305	1-216-295-00	METAL GLAZE	0	5%	1/10W	
R306	1-216-295-00	METAL GLAZE	0	5%	1/10W	
R307	1-216-115-00	METAL GLAZE	560K	5%	1/10W	
R308	1-216-065-00	METAL GLAZE	4.7K	5%	1/10W	
R311	1-216-055-00	METAL GLAZE	1.8K	5%	1/10W	
R312	1-216-073-00	METAL GLAZE	10K	5%	1/10W	
R313	1-216-649-11	METAL CHIP	820	0.50%	1/10W	
R314	1-216-099-00	METAL GLAZE	120K	5%	1/10W	
R315	1-216-099-00	METAL GLAZE	120K	5%	1/10W	
R316	1-216-049-00	METAL GLAZE	1K	5%	1/10W	
R317	1-216-057-00	METAL GLAZE	2.2K	5%	1/10W	
R318	1-216-049-00	METAL GLAZE	1K	5%	1/10W	
R319	1-216-069-00	METAL GLAZE	6.8K	5%	1/10W	
R320	1-216-057-00	METAL GLAZE	2.2K	5%	1/10W	
R321	1-216-051-00	METAL GLAZE	1.2K	5%	1/10W	
R322	1-216-035-00	METAL GLAZE	270	5%	1/10W	
R323	1-216-109-00	METAL GLAZE	330K	5%	1/10W	
R324	1-216-101-00	METAL GLAZE	150K	5%	1/10W	
R325	1-216-037-00	METAL GLAZE	330	5%	1/10W	
R326	1-216-033-00	METAL GLAZE	220	5%	1/10W	
R328	1-216-121-00	METAL GLAZE	1M	5%	1/10W	
R329	1-216-055-00	METAL GLAZE	1.8K	5%	1/10W	
R330	1-216-089-91	METAL GLAZE	47K	5%	1/10W	
R331	1-216-093-00	METAL GLAZE	68K	5%	1/10W	
R332	1-216-097-00	METAL GLAZE	100K	5%	1/10W	
R333	1-216-097-00	METAL GLAZE	100K	5%	1/10W	
R334	1-216-093-00	METAL GLAZE	68K	5%	1/10W	
R335	1-216-083-00	METAL GLAZE	27K	5%	1/10W	
R336	1-216-065-00	METAL GLAZE	4.7K	5%	1/10W	
R337	1-216-073-00	METAL GLAZE	10K	5%	1/10W	
R338	1-216-091-00	METAL GLAZE	56K	5%	1/10W	
R339	1-216-071-00	METAL GLAZE	8.2K	5%	1/10W	
R340	1-216-089-91	METAL GLAZE	47K	5%	1/10W	
R341	1-216-673-11	METAL CHIP	8.2K	0.50%	1/10W	
R342	1-216-065-00	METAL GLAZE	4.7K	5%	1/10W	
R343	1-216-095-00	METAL GLAZE	82K	5%	1/10W	
R344	1-216-099-00	METAL GLAZE	120K	5%	1/10W	
R345	1-216-063-00	METAL GLAZE	3.9K	5%	1/10W	
R346	1-216-057-00	METAL GLAZE	2.2K	5%	1/10W	
R347	1-216-065-00	METAL GLAZE	4.7K	5%	1/10W	
R348	1-216-031-00	METAL GLAZE	180	5%	1/10W	
R349	1-216-694-11	METAL CHIP	62K	0.50%	1/10W	
R350	1-216-085-00	METAL GLAZE	33K	5%	1/10W	
R351	1-216-061-00	METAL GLAZE	3.3K	5%	1/10W	
R352	1-216-675-11	METAL CHIP	10K	0.50%	1/10W	
R353	1-216-049-00	METAL GLAZE	1K	5%	1/10W	
R355	1-216-059-00	METAL GLAZE	2.7K	5%	1/10W	
R356	1-216-689-11	METAL GLAZE	39K	5%	1/10W	
R357	1-216-121-00	METAL GLAZE	1M	5%	1/10W	
R358	1-216-053-00	METAL GLAZE	1.5K	5%	1/10W	
R359	1-216-065-00	METAL GLAZE	4.7K	5%	1/10W	
R360	1-216-039-00	METAL GLAZE	390	5%	1/10W	
R361	1-216-025-00	METAL GLAZE	100	5%	1/10W	
R362	1-216-067-00	METAL GLAZE	5.6K	5%	1/10W	
R363	1-216-113-00	METAL GLAZE	470K	5%	1/10W	
R364	1-216-113-00	METAL GLAZE	470K	5%	1/10W	
R366	1-216-065-00	METAL GLAZE	4.7K	5%	1/10W	
R367	1-216-051-00	METAL GLAZE	1.2K	5%	1/10W	
R368	1-216-049-00	METAL GLAZE	1K	5%	1/10W	
R371	1-216-069-00	METAL GLAZE	6.8K	5%	1/10W	
R372	1-216-053-00	METAL GLAZE	1.5K	5%	1/10W	
R373	1-216-645-11	METAL CHIP	560	0.50%	1/10W	
R374	1-216-647-11	METAL CHIP	680	0.50%	1/10W	
R375	1-216-053-00	METAL GLAZE	1.5K	5%	1/10W	
R376	1-216-111-00	METAL GLAZE	390K	5%	1/10W	
R378	1-216-111-00	METAL GLAZE	390K	5%	1/10W	
R379	1-216-069-00	METAL GLAZE	6.8K	5%	1/10W	
R380	1-216-065-00	METAL GLAZE	4.7K	5%	1/10W	
R381	1-216-689-11	METAL GLAZE	39K	5%	1/10W	
R382	1-216-107-00	METAL GLAZE	270K	5%	1/10W	
R383	1-216-061-00	METAL GLAZE	3.3K	5%	1/10W	
R384	1-216-073-00	METAL GLAZE	10K	5%	1/10W	
R385	1-216-065-00	METAL GLAZE	4.7K	5%	1/10W	
R387	1-216-029-00	METAL GLAZE	150	5%	1/10W	
R388	1-216-033-00	METAL GLAZE	220	5%	1/10W	
R389	1-216-645-11	METAL CHIP	560	0.50%	1/10W	
R391	1-216-113-00	METAL GLAZE	470K	5%	1/10W	
R393	1-216-073-00	METAL GLAZE	10K	5%	1/10W	
R394	1-216-083-00	METAL GLAZE	27K	5%	1/10W	
R395	1-216-647-11	METAL CHIP	680	0.50%	1/10W	
R396	1-216-113-00	METAL GLAZE	470K	5%	1/10W	
R397	1-216-113-00	METAL GLAZE	470K	5%	1/10W	
R398	1-216-105-00	METAL GLAZE	220K	5%	1/10W	
R399	1-216-111-00	METAL GLAZE	390K	5%	1/10W	
R401	1-216-053-00	METAL GLAZE	1.5K	5%	1/10W	
R402	1-216-053-00	METAL GLAZE	1.5K	5%	1/10W	
R403	1-216-069-00	METAL GLAZE	6.8K	5%	1/10W	
R404	1-216-029-00	METAL GLAZE	150	5%	1/10W	
R406	1-216-083-00	METAL GLAZE	27K	5%	1/10W	
R407	1-216-085-00	METAL GLAZE	33K	5%	1/10W	
R408	1-216-689-11	METAL CHIP	39K	0.50%	1/10W	
R410	1-216-069-00	METAL GLAZE	6.8K	5%	1/10W	
R411	1-216-033-00	METAL GLAZE	220	5%	1/10W	
R412	1-216-089-91	METAL GLAZE	47K	5%	1/10W	
R413	1-216-668-11	METAL CHIP	5.1K	0.50%	1/10W	
R416	1-216-113-00	METAL GLAZE	470K	5%	1/10W	
R417	1-216-665-11	METAL CHIP	3.9K	0.50%	1/10W	
R418	1-216-667-11	METAL CHIP	4.7K	0.50%	1/10W	
R419	1-216-065-00	METAL GLAZE	4.7K	5%	1/10W	
R420	1-216-689-11	METAL GLAZE	39K	5%	1/10W	
R422	1-216-073-00	METAL GLAZE	10K	5%	1/10W	
R423	1-216-073-00	METAL GLAZE	10K	5%	1/10W	
R424	1-216-033-00	METAL GLAZE	220	5%	1/10W	
R425	1-216-049-00	METAL GLAZE	1K	5%	1/10W	
R426	1-216-039-00	METAL GLAZE	390	5%	1/10W	
R427	1-216-033-00	METAL GLAZE	220	5%	1/10W	
R428	1-216-097-00	METAL GLAZE	100K	5%	1/10W	
R429	1-216-073-00	METAL GLAZE	10K	5%	1/10W	
R430	1-216-119-00	METAL GLAZE	820K	5%	1/10W	
R431	1-216-097-00	METAL GLAZE	100K	5%	1/10W	
R432	1-216-089-91	METAL GLAZE	47K	5%	1/10W	
R434	1-216-109-00	METAL GLAZE	330K	5%	1/10W	
R435	1-216-105-00	METAL GLAZE	220K	5%	1/10W	
R436	1-216-113-00	METAL GLAZE	470K	5%	1/10W	
R437	1-216-097-00	METAL GLAZE	100K	5%	1/10W	
R438	1-216-053-00	METAL GLAZE	1.5K	5%	1/10W	
R439	1-216-033-00	METAL GLAZE	220	5%	1/10W	

A (PVM-1351Q/1354Q)

REF.NO.	PART NO.	DESCRIPTION				REMARK
R440	1-216-049-00	METAL GLAZE	1K	5%	1/10W	
R441	1-216-645-11	METAL CHIP	560	0.50%	1/10W	
R442	1-216-647-11	METAL CHIP	680	0.50%	1/10W	
R443	1-216-049-00	METAL GLAZE	1K	5%	1/10W	
R444	1-216-105-00	METAL GLAZE	220K	5%	1/10W	
R445	1-216-095-00	METAL GLAZE	82K	5%	1/10W	
R447	1-216-069-00	METAL GLAZE	6.8K	5%	1/10W	
R448	1-216-049-00	METAL GLAZE	1K	5%	1/10W	
R449	1-216-073-00	METAL GLAZE	10K	5%	1/10W	
R450	1-216-121-00	METAL GLAZE	1M	5%	1/10W	
R451	1-216-037-00	METAL GLAZE	330	5%	1/10W	
R452	1-216-651-11	METAL CHIP	1K	0.50%	1/10W	
R453	1-216-097-00	METAL GLAZE	100K	5%	1/10W	
R455	1-216-085-00	METAL GLAZE	33K	5%	1/10W	
R456	1-216-053-00	METAL GLAZE	1.5K	5%	1/10W	
R457	1-216-025-00	METAL GLAZE	100	5%	1/10W	
R458	1-216-113-00	METAL GLAZE	470K	5%	1/10W	
R459	1-216-649-11	METAL CHIP	820	0.50%	1/10W	
R460	1-216-073-00	METAL GLAZE	10K	5%	1/10W	
R462	1-216-651-11	METAL CHIP	1K	0.50%	1/10W	
R463	1-216-065-00	METAL GLAZE	4.7K	5%	1/10W	
R464	1-216-065-00	METAL GLAZE	4.7K	5%	1/10W	
R465	1-216-025-00	METAL GLAZE	100	5%	1/10W	
R466	1-216-077-00	METAL GLAZE	15K	5%	1/10W	
R467	1-216-121-00	METAL GLAZE	1M	5%	1/10W	
R468	1-216-105-00	METAL GLAZE	220K	5%	1/10W	
R469	1-216-063-00	METAL GLAZE	3.9K	5%	1/10W	
R470	1-216-069-00	METAL GLAZE	6.8K	5%	1/10W	
R471	1-216-109-00	METAL GLAZE	330K	5%	1/10W	
R472	1-216-077-00	METAL GLAZE	15K	5%	1/10W	
R473	1-216-121-00	METAL GLAZE	1M	5%	1/10W	
R474	1-216-649-11	METAL CHIP	820	0.50%	1/10W	
R475	1-216-025-00	METAL GLAZE	100	5%	1/10W	
R476	1-216-061-00	METAL GLAZE	3.3K	5%	1/10W	
R477	1-216-061-00	METAL GLAZE	3.3K	5%	1/10W	
R478	1-216-073-00	METAL GLAZE	10K	5%	1/10W	
R479	1-216-085-00	METAL GLAZE	33K	5%	1/10W	
R480	1-216-077-00	METAL GLAZE	15K	5%	1/10W	
R481	1-216-033-00	METAL GLAZE	220	5%	1/10W	
R482	1-216-057-00	METAL GLAZE	2.2K	5%	1/10W	
R483	1-216-025-00	METAL GLAZE	100	5%	1/10W	
R484	1-216-651-11	METAL CHIP	1K	0.50%	1/10W	
R485	1-216-033-00	METAL GLAZE	220	5%	1/10W	
R486	1-216-681-11	METAL CHIP	18K	0.50%	1/10W	
R487	1-216-653-11	METAL CHIP	1.2K	0.50%	1/10W	
R488	1-216-073-00	METAL GLAZE	10K	5%	1/10W	
R489	1-216-077-00	METAL GLAZE	15K	5%	1/10W	
R490	1-216-057-00	METAL GLAZE	2.2K	5%	1/10W	
R491	1-216-061-00	METAL GLAZE	3.3K	5%	1/10W	
R492	1-216-085-00	METAL GLAZE	33K	5%	1/10W	
R493	1-216-295-00	METAL GLAZE	0	5%	1/10W	
R494	1-216-085-00	METAL GLAZE	33K	5%	1/10W	
R495	1-216-651-11	METAL CHIP	1K	0.50%	1/10W	
R496	1-216-073-00	METAL GLAZE	10K	5%	1/10W	
R497	1-216-653-11	METAL CHIP	1.2K	0.50%	1/10W	
R498	1-216-061-00	METAL GLAZE	3.3K	5%	1/10W	
R499	1-216-033-00	METAL GLAZE	220	5%	1/10W	
R500	1-216-689-11	METAL GLAZE	39K	5%	1/10W	
R501	1-216-077-00	METAL GLAZE	15K	5%	1/10W	
R502	1-216-677-11	METAL CHIP	12K	0.50%	1/10W	
R503	1-216-677-11	METAL CHIP	12K	0.50%	1/10W	
R504	1-216-111-00	METAL GLAZE	390K	5%	1/10W	
R505	1-216-067-00	METAL GLAZE	5.6K	5%	1/10W	
R506	1-216-073-00	METAL GLAZE	10K	5%	1/10W	
R507	1-216-083-00	METAL GLAZE	27K	5%	1/10W	
R508	1-216-105-00	METAL GLAZE	220K	5%	1/10W	
R509	1-216-089-91	METAL GLAZE	47K	5%	1/10W	
R510	1-216-097-00	METAL GLAZE	100K	5%	1/10W	
R511	1-216-099-00	METAL GLAZE	120K	5%	1/10W	
R512	1-216-055-00	METAL GLAZE	1.8K	5%	1/10W	
R513	1-216-295-00	METAL GLAZE	0	5%	1/10W	
R514	1-216-295-00	METAL GLAZE	0	5%	1/10W	
R515	1-216-675-11	METAL CHIP	10K	0.50%	1/10W	
R516	1-216-697-11	METAL CHIP	82K	0.50%	1/10W	
R517	1-214-888-00	METAL	10K	1%	1/2W	
R518	1-260-123-11	CARBON	100K	5%	1/2W	
R519	1-216-017-00	METAL GLAZE	47	5%	1/10W	
R520	1-249-423-11	CARBON	3.3K	5%	1/4W	F
R521	1-216-065-00	METAL GLAZE	4.7K	5%	1/10W	
R522	1-260-111-11	CARBON	10K	5%	1/2W	
R523	1-215-892-11	METAL OXIDE	1K	5%	2W	F
R524	1-216-093-00	METAL GLAZE	68K	5%	1/10W	
R525	1-216-069-00	METAL GLAZE	6.8K	5%	1/10W	
R526	1-216-089-91	METAL GLAZE	47K	5%	1/10W	
R527	1-216-089-91	METAL GLAZE	47K	5%	1/10W	
R528	1-216-089-91	METAL GLAZE	47K	5%	1/10W	
R529	1-216-089-91	METAL GLAZE	47K	5%	1/10W	
R530	1-216-367-11	METAL OXIDE	0.68	5%	2W	F
R531	1-216-077-00	METAL GLAZE	15K	5%	1/10W	
R532	1-215-919-71	METAL OXIDE	2.2K	5%	3W	F
R533	1-247-723-11	CARBON	6.8K	5%	1/4W	F
R534	1-216-085-00	METAL GLAZE	33K	5%	1/10W	
R535	1-249-448-11	CARBON	1.2	5%	1/4W	F
R536	1-216-101-00	METAL GLAZE	150K	5%	1/10W	
R537	1-216-089-91	METAL GLAZE	47K	5%	1/10W	
R539	1-216-065-00	METAL GLAZE	4.7K	5%	1/10W	
R540	1-216-113-00	METAL GLAZE	470K	5%	1/10W	
R541	1-249-383-11	CARBON	1.5	5%	1/4W	F
R542	1-216-057-00	METAL GLAZE	2.2K	5%	1/10W	
R543	1-212-883-00	FUSIBLE	120	5%	1/4W	F
R544	1-216-095-00	METAL GLAZE	82K	5%	1/10W	
R545	1-216-073-00	METAL GLAZE	10K	5%	1/10W	
R546	1-249-425-11	CARBON	4.7K	5%	1/4W	F
R548	1-216-057-00	METAL GLAZE	2.2K	5%	1/10W	
R549	1-216-677-11	METAL CHIP	12K	0.50%	1/10W	
R550	1-216-053-00	METAL GLAZE	1.5K	5%	1/10W	
R551	1-216-077-00	METAL GLAZE	15K	5%	1/10W	
R552	1-216-033-00	METAL GLAZE	220	5%	1/10W	
R553	1-216-083-00	METAL GLAZE	27K	5%	1/10W	
R554	1-216-095-00	METAL GLAZE	82K	5%	1/10W	
R555	1-216-692-11	METAL CHIP	51K	0.50%	1/10W	
R556	1-216-464-11	METAL OXIDE	18K	5%	2W	F
R558	1-247-711-11	CARBON	680	5%	1/4W	F
R559	1-216-109-00	METAL GLAZE	330K	5%	1/10W	
R560	1-216-091-00	METAL GLAZE	56K	5%	1/10W	
R561	1-216-049-00	METAL GLAZE	1K	5%	1/10W	
R563	1-216-017-00	METAL GLAZE	47	5%	1/10W	
R564	1-216-107-00	METAL GLAZE	270K	5%	1/10W	
R565	1-216-033-00	METAL GLAZE	220	5%	1/10W	
R566	1-216-685-11	METAL CHIP	27K	0.50%	1/10W	
R567	1-216-081-00	METAL GLAZE	22K	5%	1/10W	
R568	1-216-073-00	METAL GLAZE	10K	5%	1/10W	
R569	1-260-114-11	CARBON	18K	5%	1/2W	
R571	1-216-065-00	METAL GLAZE	4.7K	5%	1/10W	
R572	1-216-059-00	METAL GLAZE	2.7K	5%	1/10W	
R573	1-216-071-00	METAL GLAZE	8.2K	5%	1/10W	
R574	1-216-689-11	METAL GLAZE	39K	5%	1/10W	

A (PVM-1351Q/1354Q)

REF.NO.	PART NO.	DESCRIPTION				REMARK
R576	1-216-101-00	METAL GLAZE	150K	5%	1/10W	
R578	1-216-693-11	METAL CHIP	56K	0.50%	1/10W	
R580	1-216-105-00	METAL GLAZE	220K	5%	1/10W	
R582	1-216-085-00	METAL GLAZE	33K	5%	1/10W	
R583	1-216-039-00	METAL GLAZE	390	5%	1/10W	
R584	1-216-071-00	METAL GLAZE	8.2K	5%	1/10W	
R585	1-216-033-00	METAL GLAZE	220	5%	1/10W	
R586	1-216-686-11	METAL CHIP	30K	0.50%	1/10W	
R587	1-216-675-11	METAL CHIP	10K	0.50%	1/10W	
R588	1-216-077-00	METAL GLAZE	15K	5%	1/10W	
R589	1-216-067-00	METAL GLAZE	5.6K	5%	1/10W	
R590	1-216-081-00	METAL GLAZE	22K	5%	1/10W	
R591	1-216-683-11	METAL CHIP	22K	0.50%	1/10W	
R592	1-247-688-11	CARBON	10	5%	1/4W	F
R593	1-216-647-11	METAL CHIP	680	0.50%	1/10W	
R594	1-260-104-91	CARBON	2.7K	5%	1/2W	
R595	1-216-689-11	METAL GLAZE	39K	5%	1/10W	
R596	1-214-754-00	METAL	11K	1%	1/4W	
R597	1-249-417-11	CARBON	1K	5%	1/4W	F
R598	1-216-085-00	METAL GLAZE	33K	5%	1/10W	
R599	1-216-645-11	METAL CHIP	560	0.50%	1/10W	
R1101	1-216-295-00	METAL GLAZE	0	5%	1/10W	
R1102	1-216-295-00	METAL GLAZE	0	5%	1/10W	
R1103	1-216-077-00	METAL GLAZE	15K	5%	1/10W	
R1104	1-216-699-11	METAL CHIP	100K	0.50%	1/10W	
R1105	1-216-073-00	METAL GLAZE	10K	5%	1/10W	
R1106	1-216-097-00	METAL GLAZE	100K	5%	1/10W	
R1107	1-216-059-00	METAL GLAZE	2.7K	5%	1/10W	
R1108	1-216-681-11	METAL CHIP	18K	0.50%	1/10W	
R1109	1-216-295-00	METAL GLAZE	0	5%	1/10W	
R1110	1-216-295-00	METAL GLAZE	0	5%	1/10W	
R1111	1-216-065-00	METAL GLAZE	4.7K	5%	1/10W	
R1112	1-216-065-00	METAL GLAZE	4.7K	5%	1/10W	
R1113	1-216-081-00	METAL GLAZE	22K	5%	1/10W	
R1114	1-216-049-00	METAL GLAZE	1K	5%	1/10W	
R1115	1-216-049-00	METAL GLAZE	1K	5%	1/10W	
R1116	1-216-677-11	METAL CHIP	12K	0.50%	1/10W	
R1117	1-216-069-00	METAL GLAZE	6.8K	5%	1/10W	
R1118	1-216-113-00	METAL GLAZE	470K	5%	1/10W	
R1119	1-216-694-11	METAL CHIP	62K	0.50%	1/10W	
R1120	1-216-089-91	METAL GLAZE	47K	5%	1/10W	
R1123	1-216-071-00	METAL GLAZE	8.2K	5%	1/10W	
R1124	1-216-113-00	METAL GLAZE	470K	5%	1/10W	
R1125	1-216-049-00	METAL GLAZE	1K	5%	1/10W	
R1126	1-216-041-00	METAL GLAZE	470	5%	1/10W	
R1127	1-216-295-00	METAL GLAZE	0	5%	1/10W	
R1128	1-216-065-00	METAL GLAZE	4.7K	5%	1/10W	
R1129	1-216-071-00	METAL GLAZE	8.2K	5%	1/10W	
R1130	1-216-049-00	METAL GLAZE	1K	5%	1/10W	
R1131	1-216-049-00	METAL GLAZE	1K	5%	1/10W	
R1132	1-216-071-00	METAL GLAZE	8.2K	5%	1/10W	
R1133	1-216-069-00	METAL GLAZE	6.8K	5%	1/10W	
R1134	1-216-073-00	METAL GLAZE	10K	5%	1/10W	
R1135	1-216-295-00	METAL GLAZE	0	5%	1/10W	
R1136	1-216-097-00	METAL GLAZE	100K	5%	1/10W	
R1137	1-216-073-00	METAL GLAZE	10K	5%	1/10W	
R1138	1-216-081-00	METAL GLAZE	22K	5%	1/10W	
R1139	1-216-055-00	METAL GLAZE	1.8K	5%	1/10W	
R1140	1-216-653-11	METAL CHIP	1.2K	0.50%	1/10W	
R1141	1-216-083-00	METAL GLAZE	27K	5%	1/10W	
R1142	1-216-653-11	METAL CHIP	1.2K	0.50%	1/10W	
R1143	1-216-653-11	METAL CHIP	1.2K	0.50%	1/10W	
R1144	1-216-073-00	METAL GLAZE	10K	5%	1/10W	
R1145	1-216-067-00	METAL GLAZE	5.6K	5%	1/10W	
R1146	1-216-057-00	METAL GLAZE	2.2K	5%	1/10W	
R1147	1-216-057-00	METAL GLAZE	2.2K	5%	1/10W	
R1148	1-216-065-00	METAL GLAZE	4.7K	5%	1/10W	
R1150	1-216-037-00	METAL GLAZE	330	5%	1/10W	
R1151	1-216-081-00	METAL GLAZE	22K	5%	1/10W	
R1155	1-216-133-00	METAL GLAZE	3.3M	5%	1/10W	
R1161	1-218-776-11	METAL CHIP	1M	0.50%	1/10W	
R1162	1-218-768-11	METAL CHIP	470K	0.50%	1/10W	
R1163	1-216-033-00	METAL GLAZE	220	5%	1/10W	
R1164	1-216-049-00	METAL GLAZE	1K	5%	1/10W	
R1165	1-216-049-00	METAL GLAZE	1K	5%	1/10W	
R1166	1-216-295-00	METAL GLAZE	0	5%	1/10W	
R1167	1-216-097-00	METAL GLAZE	100K	5%	1/10W	
R1168	1-216-097-00	METAL GLAZE	100K	5%	1/10W	
R1169	1-216-097-00	METAL GLAZE	100K	5%	1/10W	
R1170	1-216-089-91	METAL GLAZE	47K	5%	1/10W	
R1171	1-216-085-00	METAL GLAZE	33K	5%	1/10W	
R1172	1-216-085-00	METAL GLAZE	33K	5%	1/10W	
R1173	1-216-295-00	METAL GLAZE	0	5%	1/10W	
R1176	1-216-295-00	METAL GLAZE	0	5%	1/10W	
R1177	1-216-071-00	METAL GLAZE	8.2K	5%	1/10W	
R1178	1-216-295-00	METAL GLAZE	0	5%	1/10W	
R1179	1-216-041-00	METAL GLAZE	470	5%	1/10W	
R1180	1-216-089-91	METAL GLAZE	47K	5%	1/10W	
R1181	1-216-295-00	METAL GLAZE	0	5%	1/10W	
R1182	1-216-131-11	METAL GLAZE	2.7M	5%	1/10W	
R1183	1-216-071-00	METAL GLAZE	8.2K	5%	1/10W	
R1184	1-216-131-11	METAL GLAZE	2.7M	5%	1/10W	
R1185	1-216-071-00	METAL GLAZE	8.2K	5%	1/10W	
R1186	1-216-131-11	METAL GLAZE	2.7M	5%	1/10W	
R1187	1-216-071-00	METAL GLAZE	8.2K	5%	1/10W	
R1188	1-216-131-11	METAL GLAZE	2.7M	5%	1/10W	
R1189	1-216-071-00	METAL GLAZE	8.2K	5%	1/10W	
R1190	1-216-131-11	METAL GLAZE	2.7M	5%	1/10W	
R1191	1-216-071-00	METAL GLAZE	8.2K	5%	1/10W	
R1192	1-216-131-11	METAL GLAZE	2.7M	5%	1/10W	
R1193	1-216-025-00	METAL GLAZE	100	5%	1/10W	
R1194	1-216-085-00	METAL GLAZE	33K	5%	1/10W	
R1195	1-216-025-00	METAL GLAZE	100	5%	1/10W	
R1196	1-216-085-00	METAL GLAZE	33K	5%	1/10W	
R1197	1-216-025-00	METAL GLAZE	100	5%	1/10W	
R1198	1-216-085-00	METAL GLAZE	33K	5%	1/10W	
R1301	1-216-029-00	METAL GLAZE	150	5%	1/10W	
R1302	1-216-029-00	METAL GLAZE	150	5%	1/10W	
R1303	1-216-039-00	METAL GLAZE	390	5%	1/10W	
R1304	1-216-689-11	METAL GLAZE	39K	5%	1/10W	
R1305	1-216-033-00	METAL GLAZE	220	5%	1/10W	
R1306	1-216-645-11	METAL CHIP	560	0.50%	1/10W	
R1307	1-216-091-00	METAL GLAZE	56K	5%	1/10W	
R1308	1-216-645-11	METAL CHIP	560	0.50%	1/10W	
R1309	1-216-025-00	METAL GLAZE	100	5%	1/10W	
R1310	1-216-025-00	METAL GLAZE	100	5%	1/10W	
R1311	1-216-089-91	METAL GLAZE	47K	5%	1/10W	
R1312	1-216-027-00	METAL GLAZE	120	5%	1/10W	
R1313	1-216-097-00	METAL GLAZE	100K	5%	1/10W	
R1314	1-216-081-00	METAL GLAZE	22K	5%	1/10W	
R1315	1-216-025-00	METAL GLAZE	100	5%	1/10W	
R1316	1-216-065-00	METAL GLAZE	4.7K	5%	1/10W	
R1317	1-216-041-00	METAL GLAZE	470	5%	1/10W	
R1318	1-216-061-00	METAL GLAZE	3.3K	5%	1/10W	
R1319	1-216-085-00	METAL GLAZE	33K	5%	1/10W	
R1320	1-216-065-00	METAL GLAZE	4.7K	5%	1/10W	
R1321	1-216-649-11	METAL CHIP	820	0.50%	1/10W	

A (PVM-1351Q/1354Q)

REF.NO.	PART NO.	DESCRIPTION				REMARK
R1322	1-216-057-00	METAL GLAZE	2.2K	5%	1/10W	
R1323	1-216-097-00	METAL GLAZE	100K	5%	1/10W	
R1324	1-216-061-00	METAL GLAZE	3.3K	5%	1/10W	
R1325	1-216-652-11	METAL CHIP	1.1K	0.50%	1/10W	
R1326	1-216-073-00	METAL GLAZE	10K	5%	1/10W	
R1327	1-216-073-00	METAL GLAZE	10K	5%	1/10W	
R1328	1-216-125-00	METAL GLAZE	1.5M	5%	1/10W	
R1329	1-216-103-91	METAL GLAZE	180K	5%	1/10W	
R1330	1-216-081-00	METAL GLAZE	22K	5%	1/10W	
R1331	1-216-679-11	METAL CHIP	15K	0.50%	1/10W	
R1332	1-216-671-11	METAL CHIP	6.8K	0.50%	1/10W	
R1333	1-216-049-00	METAL GLAZE	1K	5%	1/10W	
R1334	1-216-063-00	METAL GLAZE	3.9K	5%	1/10W	
R1335	1-249-401-11	CARBON	47	5%	1/4W	F
R1336	1-216-095-00	METAL GLAZE	82K	5%	1/10W	
R1337	1-216-061-00	METAL GLAZE	3.3K	5%	1/10W	
R1338	1-216-647-11	METAL CHIP	680	0.50%	1/10W	
R1339	1-216-033-00	METAL GLAZE	220	5%	1/10W	
R1340	1-216-033-00	METAL GLAZE	220	5%	1/10W	
R1341	1-216-033-00	METAL GLAZE	220	5%	1/10W	
R1342	1-216-083-00	METAL GLAZE	27K	5%	1/10W	
R1343	1-216-037-00	METAL GLAZE	330	5%	1/10W	
R1344	1-216-093-00	METAL GLAZE	68K	5%	1/10W	
R1345	1-216-109-00	METAL GLAZE	330K	5%	1/10W	
R1346	1-216-097-00	METAL GLAZE	100K	5%	1/10W	
R1347	1-216-073-00	METAL GLAZE	10K	5%	1/10W	
R1348	1-216-071-00	METAL GLAZE	8.2K	5%	1/10W	
R1349	1-216-035-00	METAL GLAZE	270	5%	1/10W	
R1350	1-216-073-00	METAL GLAZE	10K	5%	1/10W	
R1351	1-216-033-00	METAL GLAZE	220	5%	1/10W	
R1352	1-216-065-00	METAL GLAZE	4.7K	5%	1/10W	
R1353	1-216-065-00	METAL GLAZE	4.7K	5%	1/10W	
R1354	1-216-089-91	METAL GLAZE	47K	5%	1/10W	
R1355	1-216-033-00	METAL GLAZE	220	5%	1/10W	
R1356	1-216-105-00	METAL GLAZE	220K	5%	1/10W	
R1357	1-216-101-00	METAL GLAZE	150K	5%	1/10W	
R1358	1-216-071-00	METAL GLAZE	8.2K	5%	1/10W	
R1359	1-216-099-00	METAL GLAZE	120K	5%	1/10W	
R1360	1-216-065-00	METAL GLAZE	4.7K	5%	1/10W	
R1361	1-216-113-00	METAL GLAZE	470K	5%	1/10W	
R1362	1-216-676-11	METAL CHIP	11K	0.50%	1/10W	
R1363	1-216-113-00	METAL GLAZE	470K	5%	1/10W	
R1364	1-216-073-00	METAL GLAZE	10K	5%	1/10W	
R1365	1-216-131-11	METAL GLAZE	2.7M	5%	1/10W	
R1366	1-216-081-00	METAL GLAZE	22K	5%	1/10W	
R1367	1-216-057-00	METAL GLAZE	2.2K	5%	1/10W	
R1368	1-216-059-00	METAL GLAZE	2.7K	5%	1/10W	
R1369	1-216-051-00	METAL GLAZE	1.2K	5%	1/10W	
R1370	1-216-105-00	METAL GLAZE	220K	5%	1/10W	
R1371	1-216-113-00	METAL GLAZE	470K	5%	1/10W	
R1372	1-249-437-11	CARBON	47K	5%	1/4W	
R1373	1-216-063-00	METAL GLAZE	3.9K	5%	1/10W	
R1374	1-216-101-00	METAL GLAZE	150K	5%	1/10W	
R1375	1-216-645-11	METAL CHIP	560	0.50%	1/10W	
R1376	1-216-647-11	METAL CHIP	680	0.50%	1/10W	
R1377	1-216-055-00	METAL GLAZE	1.8K	5%	1/10W	
R1378	1-216-065-00	METAL GLAZE	4.7K	5%	1/10W	
R1379	1-216-037-00	METAL GLAZE	330	5%	1/10W	
R1380	1-216-645-11	METAL CHIP	560	0.50%	1/10W	
R1381	1-216-647-11	METAL CHIP	680	0.50%	1/10W	
R1382	1-216-073-00	METAL GLAZE	10K	5%	1/10W	
R1383	1-216-681-11	METAL CHIP	18K	0.50%	1/10W	
R1384	1-216-091-00	METAL GLAZE	56K	5%	1/10W	
R1385	1-216-073-00	METAL GLAZE	10K	5%	1/10W	
R1386	1-216-077-00	METAL GLAZE	15K	5%	1/10W	
R1387	1-216-653-11	METAL CHIP	1.2K	0.50%	1/10W	
R1388	1-216-689-11	METAL CHIP	39K	0.50%	1/10W	
R1389	1-216-657-11	METAL CHIP	1.8K	0.50%	1/10W	
R1390	1-216-647-11	METAL CHIP	680	0.50%	1/10W	
R1391	1-216-025-00	METAL GLAZE	100	5%	1/10W	
R1392	1-216-041-00	METAL GLAZE	470	5%	1/10W	
R1393	1-216-063-00	METAL GLAZE	3.9K	5%	1/10W	
R1394	1-216-041-00	METAL GLAZE	470	5%	1/10W	
R1395	1-216-071-00	METAL GLAZE	8.2K	5%	1/10W	
R1396	1-216-071-00	METAL GLAZE	8.2K	5%	1/10W	
R1397	1-216-065-00	METAL GLAZE	4.7K	5%	1/10W	
R1399	1-216-073-00	METAL GLAZE	10K	5%	1/10W	
R1401	1-216-085-00	METAL GLAZE	33K	5%	1/10W	
R1402	1-216-295-00	METAL GLAZE	0	5%	1/10W	
R1403	1-216-651-11	METAL CHIP	1K	0.50%	1/10W	
R1404	1-216-681-11	METAL CHIP	18K	0.50%	1/10W	
R1405	1-216-071-00	METAL GLAZE	8.2K	5%	1/10W	
R1406	1-216-653-11	METAL CHIP	1.2K	0.50%	1/10W	
R1407	1-216-061-00	METAL GLAZE	3.3K	5%	1/10W	
R1408	1-216-113-00	METAL GLAZE	470K	5%	1/10W	
R1409	1-216-295-00	METAL GLAZE	0	5%	1/10W	
R1410	1-216-053-00	METAL GLAZE	1.5K	5%	1/10W	
R1411	1-216-073-00	METAL GLAZE	10K	5%	1/10W	
R1412	1-216-107-00	METAL GLAZE	270K	5%	1/10W	
R1413	1-216-081-00	METAL GLAZE	22K	5%	1/10W	
R1414	1-216-057-00	METAL GLAZE	2.2K	5%	1/10W	
R1415	1-216-093-00	METAL GLAZE	68K	5%	1/10W	
R1416	1-216-113-00	METAL GLAZE	470K	5%	1/10W	
R1417	1-216-033-00	METAL GLAZE	220	5%	1/10W	
R1418	1-216-033-00	METAL GLAZE	220	5%	1/10W	
R1419	1-216-025-00	METAL GLAZE	100	5%	1/10W	
R1420	1-216-089-91	METAL GLAZE	47K	5%	1/10W	
R1421	1-216-649-11	METAL CHIP	820	0.50%	1/10W	
R1422	1-216-085-00	METAL GLAZE	33K	5%	1/10W	
R1423	1-216-057-00	METAL GLAZE	2.2K	5%	1/10W	
R1424	1-216-081-00	METAL GLAZE	22K	5%	1/10W	
R1425	1-216-013-00	METAL GLAZE	33	5%	1/10W	
R1426	1-216-113-00	METAL GLAZE	470K	5%	1/10W	
R1427	1-216-681-11	METAL CHIP	18K	0.50%	1/10W	
R1428	1-216-061-00	METAL GLAZE	3.3K	5%	1/10W	
R1429	1-216-668-11	METAL CHIP	5.1K	0.50%	1/10W	
R1430	1-216-073-00	METAL GLAZE	10K	5%	1/10W	
R1431	1-216-129-00	METAL GLAZE	2.2M	5%	1/10W	
R1432	1-216-089-91	METAL GLAZE	47K	5%	1/10W	
R1433	1-216-085-00	METAL GLAZE	33K	5%	1/10W	
R1434	1-216-645-11	METAL CHIP	560	0.50%	1/10W	
R1435	1-216-055-00	METAL GLAZE	1.8K	5%	1/10W	
R1436	1-216-073-00	METAL GLAZE	10K	5%	1/10W	
R1437	1-216-069-00	METAL GLAZE	6.8K	5%	1/10W	
R1438	1-216-073-00	METAL GLAZE	10K	5%	1/10W	
R1439	1-216-059-00	METAL GLAZE	2.7K	5%	1/10W	
R1440	1-216-041-00	METAL GLAZE	470	5%	1/10W	
R1441	1-216-033-00	METAL GLAZE	220	5%	1/10W	
R1442	1-216-073-00	METAL GLAZE	10K	5%	1/10W	
R1443	1-216-013-00	METAL GLAZE	33	5%	1/10W	
R1444	1-216-057-00	METAL GLAZE	2.2K	5%	1/10W	
R1445	1-216-071-00	METAL GLAZE	8.2K	5%	1/10W	
R1446	1-216-071-00	METAL GLAZE	8.2K	5%	1/10W	
R1447	1-216-081-00	METAL GLAZE	22K	5%	1/10W	
R1448	1-216-085-00	METAL GLAZE	33K	5%	1/10W	
R1449	1-216-057-00	METAL GLAZE	2.2K	5%	1/10W	
R1450	1-216-129-00	METAL GLAZE	2.2M	5%	1/10W	

The components identified by shading and mark ⚠ are critical for safety.
Replace only with part number specified.

Les composants identifies par une trame et une marque ⚠ sont critiques pour la securite.
Ne les remplacer que par une piece portant le numero specifie.

A (PVM-1351Q/1354Q)

REF.NO.	PART NO.	DESCRIPTION				REMARK
R1451	1-216-093-00	METAL GLAZE	68K	5%	1/10W	
R1452	1-216-085-00	METAL GLAZE	33K	5%	1/10W	
R1453	1-216-013-00	METAL GLAZE	33	5%	1/10W	
R1454	1-216-065-00	METAL GLAZE	4.7K	5%	1/10W	
R1455	1-216-113-00	METAL GLAZE	470K	5%	1/10W	
R1456	1-216-129-00	METAL GLAZE	2.2M	5%	1/10W	
R1457	1-216-089-91	METAL GLAZE	47K	5%	1/10W	
R1458	1-216-085-00	METAL GLAZE	33K	5%	1/10W	
R1459	1-216-133-00	METAL GLAZE	3.3M	5%	1/10W	
R1460	1-216-097-00	METAL GLAZE	100K	5%	1/10W	
R1461	1-216-645-11	METAL CHIP	560	0.50%	1/10W	
R1462	1-216-645-11	METAL CHIP	560	0.50%	1/10W	
R1463	1-216-645-11	METAL CHIP	560	0.50%	1/10W	
R1464	1-216-057-00	METAL GLAZE	2.2K	5%	1/10W	
R1465	1-216-097-00	METAL GLAZE	100K	5%	1/10W	
R1466	1-216-055-00	METAL GLAZE	1.8K	5%	1/10W	
R1467	1-216-073-00	METAL GLAZE	10K	5%	1/10W	
R1468	1-249-438-11	CARBON	56K	5%	1/4W	
R1469	1-216-057-00	METAL GLAZE	2.2K	5%	1/10W	
R1470	1-216-057-00	METAL GLAZE	2.2K	5%	1/10W	
R1471	1-216-049-00	METAL GLAZE	1K	5%	1/10W	
R1472	1-216-085-00	METAL GLAZE	33K	5%	1/10W	
R1473	1-216-081-00	METAL GLAZE	22K	5%	1/10W	
R1474	1-216-687-11	METAL CHIP	33K	0.50%	1/10W	
R1475	1-216-677-11	METAL CHIP	12K	0.50%	1/10W	
R1476	1-216-063-00	METAL GLAZE	3.9K	5%	1/10W	
R1477	1-216-057-00	METAL GLAZE	2.2K	5%	1/10W	
R1478	1-216-061-00	METAL GLAZE	3.3K	5%	1/10W	
R1479	1-216-295-00	METAL GLAZE	0	5%	1/10W	
R1480	1-216-089-91	METAL GLAZE	47K	5%	1/10W	
R1481	1-216-115-00	METAL GLAZE	560K	5%	1/10W	
R1482	1-216-089-91	METAL GLAZE	47K	5%	1/10W	
R1483	1-216-089-91	METAL GLAZE	47K	5%	1/10W	
R1484	1-216-081-00	METAL GLAZE	22K	5%	1/10W	
R1485	1-216-113-00	METAL GLAZE	470K	5%	1/10W	
R1486	1-216-121-00	METAL GLAZE	1M	5%	1/10W	
R1487	1-216-113-00	METAL GLAZE	470K	5%	1/10W	
R1488	1-216-083-00	METAL GLAZE	27K	5%	1/10W	
R1489	1-216-069-00	METAL GLAZE	6.8K	5%	1/10W	
R1490	1-216-035-00	METAL GLAZE	270	5%	1/10W	
R1491	1-216-035-00	METAL GLAZE	270	5%	1/10W	
R1492	1-216-035-00	METAL GLAZE	270	5%	1/10W	
R1493	1-216-083-00	METAL GLAZE	27K	5%	1/10W	
R1494	1-216-081-00	METAL GLAZE	22K	5%	1/10W	
R1495	1-216-089-91	METAL GLAZE	47K	5%	1/10W	
R1497	1-216-113-00	METAL GLAZE	470K	5%	1/10W	
R1498	1-216-057-00	METAL GLAZE	2.2K	5%	1/10W	
R1499	1-216-057-00	METAL GLAZE	2.2K	5%	1/10W	
R1500	1-216-647-11	METAL CHIP	680	0.50%	1/10W	
R1501	1-216-071-00	METAL GLAZE	8.2K	5%	1/10W	
R1502	1-260-105-11	CARBON	3.3K	5%	1/2W	
R1503	1-216-063-00	METAL GLAZE	3.9K	5%	1/10W	
R1504	1-216-686-11	METAL CHIP	30K	0.50%	1/10W	
R1505	1-247-688-11	CARBON	10	5%	1/4W	F
R1506	1-216-037-00	METAL GLAZE	330	5%	1/10W	
R1507	1-216-065-00	METAL GLAZE	4.7K	5%	1/10W	
R1508	1-216-689-11	METAL GLAZE	39K	5%	1/10W	
R1509	1-249-439-11	CARBON	68K	5%	1/4W	
R1510	1-216-077-00	METAL GLAZE	15K	5%	1/10W	
R1511	1-216-360-11	METAL OXIDE	8.2	5%	1W	F
R1512	1-216-647-11	METAL CHIP	680	0.50%	1/10W	
R1513	1-247-752-11	CARBON	1K	5%	1/2W	F
R1514	1-247-711-11	CARBON	680	5%	1/4W	F
R1515	1-216-350-11	METAL OXIDE	1.2	5%	1W	F
R1516	1-247-883-00	CARBON	150K	5%	1/4W	
R1518	1-215-867-00	METAL OXIDE	470	5%	1W	F
R1519	1-216-355-11	METAL OXIDE	3.3	5%	1W	F
R1520	1-216-007-00	METAL GLAZE	18	5%	1/10W	
R1521	1-216-029-00	METAL GLAZE	150	5%	1/10W	
R1522	1-249-400-11	CARBON	39	5%	1/4W	F
R1523	1-216-350-11	METAL OXIDE	1.2	5%	1W	F
R1524	1-216-427-00	METAL OXIDE	120	5%	1W	F
R1525	1-216-083-00	METAL GLAZE	27K	5%	1/10W	
R1526	1-216-089-91	METAL GLAZE	47K	5%	1/10W	
R1527	1-249-413-11	CARBON	470	5%	1/4W	F
R1528	1-215-869-11	METAL OXIDE	1K	5%	1W	F
R1529	1-202-829-11	SOLID	8.2K	20%	1/2W	
R1530	1-216-115-00	METAL GLAZE	560K	5%	1/10W	
R1531	1-247-697-11	CARBON	56	5%	1/4W	F
R1532	1-216-059-00	METAL GLAZE	2.7K	5%	1/10W	
R1533	1-249-414-11	CARBON	560	5%	1/4W	F
R1534	1-216-659-11	METAL CHIP	2.2K	0.50%	1/10W	
⊠R1535⚠						
⊠R1536⚠						
R1537	1-249-389-11	CARBON	4.7	5%	1/4W	F
R1538	1-216-073-00	METAL GLAZE	10K	5%	1/10W	
R1539	1-216-689-11	METAL GLAZE	39K	5%	1/10W	
R1540	1-216-105-00	METAL GLAZE	220K	5%	1/10W	
R1541	1-216-081-00	METAL GLAZE	22K	5%	1/10W	
R1542	1-216-111-00	METAL GLAZE	390K	5%	1/10W	
R1543	1-216-027-00	METAL GLAZE	120	5%	1/10W	
R1544	1-216-117-00	METAL GLAZE	680K	5%	1/10W	
R1545	1-216-101-00	METAL GLAZE	150K	5%	1/10W	
R1547	1-216-393-00	METAL OXIDE	2.2	5%	3W	F
R1548	1-216-057-00	METAL GLAZE	2.2K	5%	1/10W	
R1549	1-260-094-11	CARBON	390	5%	1/2W	
R1550	1-216-105-00	METAL GLAZE	220K	5%	1/10W	
R1551	1-249-393-11	CARBON	10	5%	1/4W	F
R1552	1-216-091-00	METAL GLAZE	56K	5%	1/10W	
R1553	1-216-091-00	METAL GLAZE	56K	5%	1/10W	
R1554	1-216-059-00	METAL GLAZE	2.7K	5%	1/10W	
R1555	1-216-295-00	METAL GLAZE	0	5%	1/10W	
R1556	1-216-071-00	METAL GLAZE	8.2K	5%	1/10W	
R1557	1-218-760-11	METAL CHIP	220K	0.50%	1/10W	
R1558	1-249-393-11	CARBON	10	5%	1/4W	F
R1559	1-249-393-11	CARBON	10	5%	1/4W	F
R1560	1-216-049-00	METAL GLAZE	1K	5%	1/10W	
R1561	1-216-681-11	METAL CHIP	18K	0.50%	1/10W	
R1562	1-214-964-00	METAL	1M	1%	1/4W	
R1563	1-214-964-00	METAL	1M	1%	1/4W	
R1564	1-216-681-11	METAL CHIP	18K	0.50%	1/10W	
R1567	1-216-089-91	METAL GLAZE	47K	5%	1/10W	
R1568	1-216-081-00	METAL GLAZE	22K	5%	1/10W	
R1569	1-216-073-00	METAL GLAZE	10K	5%	1/10W	
R1570	1-216-073-00	METAL GLAZE	10K	5%	1/10W	
R1571	1-216-103-91	METAL GLAZE	180K	5%	1/10W	
R1572	1-216-101-00	METAL GLAZE	150K	5%	1/10W	
R1573	1-216-073-00	METAL GLAZE	10K	5%	1/10W	
R1574	1-216-041-00	METAL GLAZE	470	5%	1/10W	
R1575	1-216-025-00	METAL GLAZE	100	5%	1/10W	
R1576	1-216-025-00	METAL GLAZE	100	5%	1/10W	
R1577	1-216-025-00	METAL GLAZE	100	5%	1/10W	
R1578	1-216-065-00	METAL GLAZE	4.7K	5%	1/10W	
R1579	1-216-689-11	METAL GLAZE	39K	5%	1/10W	
R2300	1-216-065-00	METAL GLAZE	4.7K	5%	1/10W	
R2301	1-216-065-00	METAL GLAZE	4.7K	5%	1/10W	
R2302	1-216-671-11	METAL CHIP	6.8K	0.50%	1/10W	
R2303	1-216-093-00	METAL GLAZE	68K	5%	1/10W	
R2304	1-216-105-00	METAL GLAZE	220K	5%	1/10W	
R2305	1-216-085-00	METAL GLAZE	33K	5%	1/10W	
R2306	1-216-089-91	METAL GLAZE	47K	5%	1/10W	

- The components identified by ⊠ in this manual have been carefully factory-selected for each set in order to satisfy regulations regarding X-ray radiation. Should replacement be required, replace only with the value originally used.

A (PVM-1351Q/1354Q)

REF.NO.	PART NO.	DESCRIPTION				REMARK
R2307	1-216-033-00	METAL GLAZE	220	5%	1/10W	
R2308	1-216-103-91	METAL GLAZE	180K	5%	1/10W	
R2309	1-216-049-00	METAL GLAZE	1K	5%	1/10W	
R2310	1-216-095-00	METAL GLAZE	82K	5%	1/10W	
R2311	1-216-073-00	METAL GLAZE	10K	5%	1/10W	
R2312	1-216-053-00	METAL GLAZE	1.5K	5%	1/10W	
R2313	1-216-049-00	METAL GLAZE	1K	5%	1/10W	
R2314	1-216-645-11	METAL CHIP	560	0.50%	1/10W	
R2315	1-216-679-11	METAL CHIP	15K	0.50%	1/10W	
R2316	1-216-081-00	METAL GLAZE	22K	5%	1/10W	
R2317	1-216-049-00	METAL GLAZE	1K	5%	1/10W	
R2318	1-216-069-00	METAL GLAZE	6.8K	5%	1/10W	
R2319	1-216-093-00	METAL GLAZE	68K	5%	1/10W	
R2320	1-216-677-11	METAL CHIP	12K	0.50%	1/10W	
R2321	1-216-057-00	METAL GLAZE	2.2K	5%	1/10W	
R2322	1-216-065-00	METAL GLAZE	4.7K	5%	1/10W	
R2323	1-216-683-11	METAL CHIP	22K	0.50%	1/10W	
R2324	1-216-073-00	METAL GLAZE	10K	5%	1/10W	
R2325	1-216-063-00	METAL GLAZE	3.9K	5%	1/10W	
R2326	1-216-041-00	METAL GLAZE	470	5%	1/10W	
R2327	1-216-059-00	METAL GLAZE	2.7K	5%	1/10W	
R2328	1-216-049-00	METAL GLAZE	1K	5%	1/10W	
R2329	1-216-059-00	METAL GLAZE	2.7K	5%	1/10W	
R2330	1-216-049-00	METAL GLAZE	1K	5%	1/10W	
R2331	1-216-059-00	METAL GLAZE	2.7K	5%	1/10W	
R2332	1-216-049-00	METAL GLAZE	1K	5%	1/10W	
R2333	1-216-089-91	METAL GLAZE	47K	5%	1/10W	
R2334	1-216-041-00	METAL GLAZE	470	5%	1/10W	
R2335	1-216-061-00	METAL GLAZE	3.3K	5%	1/10W	
R2336	1-216-065-00	METAL GLAZE	4.7K	5%	1/10W	
R2337	1-216-037-00	METAL GLAZE	330	5%	1/10W	
R2338	1-216-073-00	METAL GLAZE	10K	5%	1/10W	
R2339	1-216-037-00	METAL GLAZE	330	5%	1/10W	
R2340	1-216-073-00	METAL GLAZE	10K	5%	1/10W	
R2341	1-216-037-00	METAL GLAZE	330	5%	1/10W	
R2342	1-216-071-00	METAL GLAZE	8.2K	5%	1/10W	
R2343	1-216-081-00	METAL GLAZE	22K	5%	1/10W	
R2344	1-216-121-00	METAL GLAZE	1M	5%	1/10W	
R2345	1-216-681-11	METAL CHIP	18K	0.50%	1/10W	
R2346	1-216-061-00	METAL GLAZE	3.3K	5%	1/10W	
R2347	1-216-061-00	METAL GLAZE	3.3K	5%	1/10W	
R2348	1-216-061-00	METAL GLAZE	3.3K	5%	1/10W	
R2349	1-216-679-11	METAL CHIP	15K	0.50%	1/10W	
R2350	1-216-061-00	METAL GLAZE	3.3K	5%	1/10W	
R2351	1-216-061-00	METAL GLAZE	3.3K	5%	1/10W	
R2352	1-216-061-00	METAL GLAZE	3.3K	5%	1/10W	
R2353	1-216-041-00	METAL GLAZE	470	5%	1/10W	
R2354	1-216-025-00	METAL GLAZE	100	5%	1/10W	
R2356	1-216-089-91	METAL GLAZE	47K	5%	1/10W	
R2357	1-216-095-00	METAL GLAZE	82K	5%	1/10W	
R2358	1-216-025-00	METAL GLAZE	100	5%	1/10W	
R2359	1-216-097-00	METAL GLAZE	100K	5%	1/10W	
R2360	1-216-689-11	METAL GLAZE	39K	5%	1/10W	
R2361	1-216-099-00	METAL GLAZE	120K	5%	1/10W	
R2362	1-216-081-00	METAL GLAZE	22K	5%	1/10W	
R2363	1-216-065-00	METAL GLAZE	4.7K	5%	1/10W	
R2364	1-216-025-00	METAL GLAZE	100	5%	1/10W	
R2365	1-216-687-11	METAL CHIP	33K	0.50%	1/10W	
R2366	1-216-067-00	METAL GLAZE	5.6K	5%	1/10W	
R2367	1-216-093-00	METAL GLAZE	68K	5%	1/10W	
R2368	1-216-065-00	METAL GLAZE	4.7K	5%	1/10W	
R2369	1-216-083-00	METAL GLAZE	27K	5%	1/10W	
R2370	1-216-081-00	METAL GLAZE	22K	5%	1/10W	
R2371	1-216-049-00	METAL GLAZE	1K	5%	1/10W	
R2372	1-216-113-00	METAL GLAZE	470K	5%	1/10W	
R2374	1-216-097-00	METAL GLAZE	100K	5%	1/10W	
R2375	1-216-089-91	METAL GLAZE	47K	5%	1/10W	
R2376	1-216-089-91	METAL GLAZE	47K	5%	1/10W	
R2377	1-216-033-00	METAL GLAZE	220	5%	1/10W	
R2378	1-216-089-91	METAL GLAZE	47K	5%	1/10W	
R2379	1-216-033-00	METAL GLAZE	220	5%	1/10W	
R2380	1-216-089-91	METAL GLAZE	47K	5%	1/10W	
R2381	1-216-089-91	METAL GLAZE	47K	5%	1/10W	
R2382	1-216-089-91	METAL GLAZE	47K	5%	1/10W	
R2383	1-216-033-00	METAL GLAZE	220	5%	1/10W	
R2384	1-216-689-11	METAL GLAZE	39K	5%	1/10W	
R2385	1-216-073-00	METAL GLAZE	10K	5%	1/10W	
R2386	1-216-073-00	METAL GLAZE	10K	5%	1/10W	
R2387	1-216-073-00	METAL GLAZE	10K	5%	1/10W	
R2388	1-216-073-00	METAL GLAZE	10K	5%	1/10W	
R2389	1-216-033-00	METAL GLAZE	220	5%	1/10W	
R2390	1-216-647-11	METAL CHIP	680	0.50%	1/10W	
R2391	1-216-647-11	METAL CHIP	680	0.50%	1/10W	
R2392	1-216-073-00	METAL GLAZE	10K	5%	1/10W	
R2393	1-216-073-00	METAL GLAZE	10K	5%	1/10W	
R2394	1-216-081-00	METAL GLAZE	22K	5%	1/10W	
R2396	1-216-041-00	METAL GLAZE	470	5%	1/10W	
R2397	1-216-113-00	METAL GLAZE	470K	5%	1/10W	
R2398	1-216-109-00	METAL GLAZE	330K	5%	1/10W	
R2399	1-216-073-00	METAL GLAZE	10K	5%	1/10W	
R2501	1-216-083-00	METAL GLAZE	27K	5%	1/10W	
R2502	1-216-077-00	METAL GLAZE	15K	5%	1/10W	
R2551	1-216-091-00	METAL GLAZE	56K	5%	1/10W	
R2552	1-216-085-00	METAL GLAZE	33K	5%	1/10W	
R2553	1-216-083-00	METAL GLAZE	27K	5%	1/10W	
R2555	1-216-055-00	METAL GLAZE	1.8K	5%	1/10W	
R2556	1-216-051-00	METAL GLAZE	1.2K	5%	1/10W	
R2557	1-216-067-00	METAL GLAZE	5.6K	5%	1/10W	
R2558	1-216-057-00	METAL GLAZE	2.2K	5%	1/10W	
R2559	1-216-039-00	METAL GLAZE	390	5%	1/10W	
R2560	1-216-069-00	METAL GLAZE	6.8K	5%	1/10W	
R2561	1-216-001-00	METAL GLAZE	10	5%	1/10W	
R2562	1-216-001-00	METAL GLAZE	10	5%	1/10W	
R2563	1-216-057-00	METAL GLAZE	2.2K	5%	1/10W	
R3301	1-216-073-00	METAL GLAZE	10K	5%	1/10W	
R3302	1-216-065-00	METAL GLAZE	4.7K	5%	1/10W	
R3303	1-216-065-00	METAL GLAZE	4.7K	5%	1/10W	
R3304	1-216-065-00	METAL GLAZE	4.7K	5%	1/10W	
R3305	1-216-061-00	METAL GLAZE	3.3K	5%	1/10W	
R3306	1-216-063-00	METAL GLAZE	3.9K	5%	1/10W	
R3308	1-216-097-00	METAL GLAZE	100K	5%	1/10W	
R3309	1-216-073-00	METAL GLAZE	10K	5%	1/10W	
R3310	1-216-049-00	METAL GLAZE	1K	5%	1/10W	
R3311	1-216-091-00	METAL GLAZE	56K	5%	1/10W	
R3312	1-216-105-00	METAL GLAZE	220K	5%	1/10W	
R3317	1-216-103-91	METAL GLAZE	180K	5%	1/10W	
R3320	1-216-085-00	METAL GLAZE	33K	5%	1/10W	
R3333	1-216-113-00	METAL GLAZE	470K	5%	1/10W	
R3334	1-216-073-00	METAL GLAZE	10K	5%	1/10W	
R3335	1-216-113-00	METAL GLAZE	470K	5%	1/10W	
R3337	1-216-099-00	METAL GLAZE	120K	5%	1/10W	
R3338	1-218-759-11	METAL CHIP	200K	0.50%	1/10W	
R3339	1-216-093-00	METAL GLAZE	68K	5%	1/10W	
R3340	1-216-099-00	METAL GLAZE	120K	5%	1/10W	
R3341	1-216-083-00	METAL GLAZE	27K	5%	1/10W	
R3344	1-216-081-00	METAL GLAZE	22K	5%	1/10W	
R3345	1-216-033-00	METAL GLAZE	220	5%	1/10W	

A (PVM-1351Q/1354Q)

REF.NO.	PART NO.	DESCRIPTION				REMARK
R3346	1-216-025-00	METAL GLAZE	100	5%	1/10W	
R3347	1-216-025-00	METAL GLAZE	100	5%	1/10W	
R3348	1-216-025-00	METAL GLAZE	100	5%	1/10W	
R3349	1-216-025-00	METAL GLAZE	100	5%	1/10W	
R3350	1-216-113-00	METAL GLAZE	470K	5%	1/10W	
R3351	1-216-119-00	METAL GLAZE	820K	5%	1/10W	
R3355	1-216-089-91	METAL GLAZE	47K	5%	1/10W	
R3356	1-216-051-00	METAL GLAZE	1.2K	5%	1/10W	
R3357	1-216-051-00	METAL GLAZE	1.2K	5%	1/10W	
R3358	1-216-051-00	METAL GLAZE	1.2K	5%	1/10W	
R3359	1-216-081-00	METAL GLAZE	22K	5%	1/10W	
R3360	1-216-073-00	METAL GLAZE	10K	5%	1/10W	
R3361	1-216-089-91	METAL GLAZE	47K	5%	1/10W	
R3362	1-216-049-00	METAL GLAZE	1K	5%	1/10W	
R3363	1-216-049-00	METAL GLAZE	1K	5%	1/10W	
R3364	1-216-073-00	METAL GLAZE	10K	5%	1/10W	
R3365	1-216-081-00	METAL GLAZE	22K	5%	1/10W	
R3376	1-216-081-00	METAL GLAZE	22K	5%	1/10W	
R3377	1-216-107-00	METAL GLAZE	270K	5%	1/10W	
R3378	1-216-115-00	METAL GLAZE	560K	5%	1/10W	
R3381	1-216-041-00	METAL GLAZE	470	5%	1/10W	
R3382	1-216-647-11	METAL CHIP	680	0.50%	1/10W	
R3383	1-216-069-00	METAL GLAZE	6.8K	5%	1/10W	
R3384	1-216-063-00	METAL GLAZE	3.9K	5%	1/10W	
R3385	1-216-057-00	METAL GLAZE	2.2K	5%	1/10W	
R3386	1-216-057-00	METAL GLAZE	2.2K	5%	1/10W	
R3390	1-216-057-00	METAL GLAZE	2.2K	5%	1/10W	
R3394	1-216-089-91	METAL GLAZE	47K	5%	1/10W	
R3395	1-249-417-11	CARBON	1K	5%	1/4W	
R3396	1-216-041-00	METAL GLAZE	470	5%	1/10W	
R3397	1-216-041-00	METAL GLAZE	470	5%	1/10W	
R3398	1-216-101-00	METAL GLAZE	150K	5%	1/10W	
R4401	1-216-085-00	METAL GLAZE	33K	5%	1/10W	
R4402	1-216-113-00	METAL GLAZE	470K	5%	1/10W	
R4404	1-216-073-00	METAL GLAZE	10K	5%	1/10W	
R4405	1-216-067-00	METAL GLAZE	5.6K	5%	1/10W	
R4407	1-216-061-00	METAL GLAZE	3.3K	5%	1/10W	
R4408	1-216-059-00	METAL GLAZE	2.7K	5%	1/10W	
R4409	1-216-059-00	METAL GLAZE	2.7K	5%	1/10W	
R4410	1-216-059-00	METAL GLAZE	2.7K	5%	1/10W	
R4411	1-216-113-00	METAL GLAZE	470K	5%	1/10W	
R4412	1-216-113-00	METAL GLAZE	470K	5%	1/10W	
R4413	1-216-295-00	METAL GLAZE	0	5%	1/10W	
R4414	1-216-295-00	METAL GLAZE	0	5%	1/10W	
R4415	1-216-295-00	METAL GLAZE	0	5%	1/10W	
R4416	1-216-295-00	METAL GLAZE	0	5%	1/10W	

<VARIABLE RESISTOR>

RV501	1-223-102-00	RES, ADJ, WIREWOUND 120	

<TRANSFOMER>

T300	1-406-781-11	COIL
T500	1-426-668-11	TRANSFORMER, FERRITE (HDT)
T501 ⚠	1-453-163-11	TRANSFORMER ASSY, FLYBACK

<THERMISTOR>

TH500	1-807-970-11	THERMISTOR

<CRYSTAL>

The components identified by shading and mark ⚠ are critical for safety.
Replace only with part number specified.

Les composants identifies par une trame et une marque ⚠ sont critiques pour la securite.
Ne les remplacer que par une piece portant le numero specifie.

A (PVM-1350)

REF.NO.	PART NO.	DESCRIPTION	REMARK
X101	1-579-175-11	VIBRATOR, CERAMIC	
X300	1-577-259-11	VIBRATOR, CRYSTAL	
X301	1-527-722-00	OSCILLATOR, CRYSTAL	

****

*A-1297-196-A	A BOARD, COMPLETE (PVM-1350)	
	**********	
1-540-044-11	SOCKET, IC	
*4-030-359-01	HEAT SINK, H. PIN	
*4-043-154-01	HOLDER, IC	
*4-043-994-01	PLATE (CF), SHIELD	
4-363-414-00	SPACER, MICA	
4-382-854-11	SCREW (M3X10), P, SW (+)	

<BAND PASS FILTER>

BPF400	1-236-363-11	FILTER, BAND PASS

<CAPACITOR>

C105	1-163-251-11	CERAMIC CHIP 100PF	5%	50V
C106	1-163-251-11	CERAMIC CHIP 100PF	5%	50V
C114	1-163-031-11	CERAMIC CHIP 0.01MF		50V
C115	1-163-031-11	CERAMIC CHIP 0.01MF		50V
C116	1-163-031-11	CERAMIC CHIP 0.01MF		50V
C117	1-163-031-11	CERAMIC CHIP 0.01MF		50V
C118	1-163-125-00	CERAMIC CHIP 220PF	5%	50V
C119	1-165-319-11	CERAMIC CHIP 0.1MF		50V
C121	1-163-237-11	CERAMIC CHIP 27PF	5%	50V
C123	1-165-319-11	CERAMIC CHIP 0.1MF		50V
C124	1-163-251-11	CERAMIC CHIP 100PF	5%	50V
C132	1-163-141-00	CERAMIC CHIP 0.001MF	5%	50V
C133	1-163-251-11	CERAMIC CHIP 100PF	5%	50V
C134	1-163-251-11	CERAMIC CHIP 100PF	5%	50V
C135	1-163-251-11	CERAMIC CHIP 100PF	5%	50V
C136	1-163-251-11	CERAMIC CHIP 100PF	5%	50V
C141	1-164-161-11	CERAMIC CHIP 0.0022MF	10%	50V
C142	1-163-125-00	CERAMIC CHIP 220PF	5%	50V
C143	1-165-319-11	CERAMIC CHIP 0.1MF		50V
C144	1-165-319-11	CERAMIC CHIP 0.1MF		50V
C145	1-165-319-11	CERAMIC CHIP 0.1MF		50V
C154	1-163-037-11	CERAMIC CHIP 0.022MF	10%	25V
C155	1-163-023-00	CERAMIC CHIP 0.015MF	10%	50V
C156	1-163-019-00	CERAMIC CHIP 0.0068MF	10%	50V
C157	1-163-019-00	CERAMIC CHIP 0.0068MF	10%	50V
C158	1-163-809-11	CERAMIC CHIP 0.047MF	10%	25V
C159	1-163-037-11	CERAMIC CHIP 0.022MF	10%	25V
C161	1-124-477-11	ELECT 47MF	20%	16V
C162	1-163-141-00	CERAMIC CHIP 0.001MF	5%	50V
C164	1-165-319-11	CERAMIC CHIP 0.1MF		50V
C165	1-165-319-11	CERAMIC CHIP 0.1MF		50V
C166	1-164-004-11	CERAMIC CHIP 0.1MF	10%	25V
C167	1-124-472-11	ELECT 470MF	20%	10V
C168	1-124-472-11	ELECT 470MF	20%	10V
C169	1-164-232-11	CERAMIC CHIP 0.01MF	10%	50V
C171	1-163-251-11	CERAMIC CHIP 100PF	5%	50V
C172	1-163-243-11	CERAMIC CHIP 47PF	5%	50V
C173	1-163-243-11	CERAMIC CHIP 47PF	5%	50V
C200	1-124-927-11	ELECT 4.7MF	20%	50V
C201	1-106-383-00	MYLAR 0.047MF	10%	100V
C202	1-163-017-00	CERAMIC CHIP 0.0047MF	10%	50V
C203	1-124-927-11	ELECT 4.7MF	20%	50V
C204	1-124-907-11	ELECT 10MF	20%	50V

A (PVM-1350)

REF.NO.	PART NO.	DESCRIPTION			REMARK
C205	1-124-360-00	ELECT	1000MF	20%	16V
C206	1-126-375-11	ELECT	100MF	20%	25V
C207	1-124-478-11	ELECT	100MF	20%	25V
C208	1-124-907-11	ELECT	10MF	20%	50V
C209	1-124-927-11	ELECT	4.7MF	20%	50V
C304	1-164-004-11	CERAMIC CHIP	0.1MF	10%	25V
C305	1-163-125-00	CERAMIC CHIP	220PF	5%	50V
C306	1-163-031-11	CERAMIC CHIP	0.01MF		50V
C311	1-163-809-11	CERAMIC CHIP	0.047MF	10%	25V
C312	1-124-925-11	ELECT	2.2MF	20%	50V
C313	1-163-145-00	CERAMIC CHIP	0.0015MF	5%	50V
C314	1-163-249-11	CERAMIC CHIP	82PF	5%	50V
C315	1-124-907-11	ELECT	10MF	20%	50V
C316	1-124-477-11	ELECT	47MF	20%	25V
C318	1-124-907-11	ELECT	10MF	20%	50V
C326	1-164-004-11	CERAMIC CHIP	0.1MF	10%	25V
C343	1-163-031-11	CERAMIC CHIP	0.01MF		50V
C349	1-163-141-00	CERAMIC CHIP	0.001MF	5%	50V
C350	1-163-141-00	CERAMIC CHIP	0.001MF	5%	50V
C352	1-163-031-11	CERAMIC CHIP	0.01MF		50V
C353	1-165-319-11	CERAMIC CHIP	0.1MF		50V
C354	1-163-121-00	CERAMIC CHIP	150PF	5%	50V
C355	1-124-903-11	ELECT	1MF	20%	50V
C356	1-124-927-11	ELECT	4.7MF	20%	50V
C358	1-163-031-11	CERAMIC CHIP	0.01MF		50V
C359	1-124-477-11	ELECT	47MF	20%	25V
C360	1-164-232-11	CERAMIC CHIP	0.01MF	10%	50V
C361	1-163-031-11	CERAMIC CHIP	0.01MF		50V
C362	1-163-031-11	CERAMIC CHIP	0.01MF		50V
C363	1-163-099-00	CERAMIC CHIP	18PF	5%	50V
C364	1-163-031-11	CERAMIC CHIP	0.01MF		50V
C365	1-106-343-00	MYLAR	0.001MF	10%	100V
C366	1-163-031-11	CERAMIC CHIP	0.01MF		50V
C367	1-163-031-11	CERAMIC CHIP	0.01MF		50V
C368	1-124-907-11	ELECT	10MF	20%	50V
C369	1-164-298-11	CERAMIC CHIP	0.15MF	10%	25V
C370	1-124-477-11	ELECT	47MF	20%	25V
C371	1-124-477-11	ELECT	47MF	20%	25V
C372	1-163-031-11	CERAMIC CHIP	0.01MF		50V
C373	1-163-141-00	CERAMIC CHIP	0.001MF	5%	50V
C374	1-124-903-11	ELECT	1MF	20%	50V
C375	1-163-125-00	CERAMIC CHIP	220PF	5%	50V
C376	1-124-902-00	ELECT	0.47MF	20%	50V
C377	1-163-809-11	CERAMIC CHIP	0.047MF	10%	25V
C378	1-163-809-11	CERAMIC CHIP	0.047MF	10%	25V
C379	1-163-031-11	CERAMIC CHIP	0.01MF		50V
C380	1-124-472-11	ELECT	470MF	20%	10V
C381	1-163-031-11	CERAMIC CHIP	0.01MF		50V
C382	1-163-243-11	CERAMIC CHIP	47PF	5%	50V
C383	1-124-477-11	ELECT	47MF	20%	25V
C384	1-163-249-11	CERAMIC CHIP	82PF	5%	50V
C385	1-124-477-11	ELECT	47MF	20%	25V
C386	1-124-907-11	ELECT	10MF	20%	50V
C387	1-163-141-00	CERAMIC CHIP	0.001MF	5%	50V
C388	1-124-907-11	ELECT	10MF	20%	50V
C390	1-163-243-11	CERAMIC CHIP	47PF	5%	50V
C391	1-124-477-11	ELECT	47MF	20%	25V
C392	1-164-298-11	CERAMIC CHIP	0.15MF	10%	25V
C393	1-164-298-11	CERAMIC CHIP	0.15MF	10%	25V
C394	1-124-477-11	ELECT	47MF	20%	25V
C395	1-163-235-11	CERAMIC CHIP	22PF	5%	50V
C396	1-164-299-11	CERAMIC CHIP	0.22MF	10%	25V
C397	1-124-477-11	ELECT	47MF	20%	25V
C398	1-124-477-11	ELECT	47MF	20%	25V
C399	1-124-477-11	ELECT	47MF	20%	25V
C400	1-164-232-11	CERAMIC CHIP	0.01MF	10%	50V
C401	1-164-346-11	CERAMIC CHIP	1MF		16V
C402	1-124-910-11	ELECT	47MF	20%	50V
C403	1-164-232-11	CERAMIC CHIP	0.01MF	10%	50V
C406	1-124-916-11	ELECT	22MF	20%	50V
C407	1-124-477-11	ELECT	47MF	20%	25V
C408	1-164-232-11	CERAMIC CHIP	0.01MF	10%	50V
C409	1-163-031-11	CERAMIC CHIP	0.01MF		50V
C410	1-124-916-11	ELECT	22MF	20%	50V
C411	1-164-004-11	CERAMIC CHIP	0.1MF	10%	25V
C414	1-163-031-11	CERAMIC CHIP	0.01MF		50V
C415	1-124-907-11	ELECT	10MF	20%	50V
C416	1-164-232-11	CERAMIC CHIP	0.01MF	10%	50V
C417	1-164-232-11	CERAMIC CHIP	0.01MF	10%	50V
C418	1-164-182-11	CERAMIC CHIP	0.0033MF	10%	50V
C419	1-124-472-11	ELECT	470MF	20%	10V
C420	1-163-809-11	CERAMIC CHIP	0.047MF	10%	25V
C421	1-164-222-11	CERAMIC CHIP	0.22MF		25V
C422	1-124-903-11	ELECT	1MF	20%	50V
C423	1-163-809-11	CERAMIC CHIP	0.047MF	10%	25V
C424	1-163-809-11	CERAMIC CHIP	0.047MF	10%	25V
C425	1-163-031-11	CERAMIC CHIP	0.01MF		50V
C426	1-163-243-11	CERAMIC CHIP	47PF	5%	50V
C427	1-163-031-11	CERAMIC CHIP	0.01MF		50V
C428	1-124-119-00	ELECT	330MF	20%	16V
C429	1-163-031-11	CERAMIC CHIP	0.01MF		50V
C430	1-124-119-00	ELECT	330MF	20%	16V
C431	1-165-319-11	CERAMIC CHIP	0.1MF		50V
C432	1-164-004-11	CERAMIC CHIP	0.1MF	10%	25V
C433	1-163-235-11	CERAMIC CHIP	22PF	5%	50V
C434	1-163-031-11	CERAMIC CHIP	0.01MF		50V
C435	1-163-089-00	CERAMIC CHIP	6PF	0.25PF	50V
C436	1-164-004-11	CERAMIC CHIP	0.1MF	10%	25V
C437	1-164-004-11	CERAMIC CHIP	0.1MF	10%	25V
C438	1-163-809-11	CERAMIC CHIP	0.047MF	10%	25V
C439	1-163-809-11	CERAMIC CHIP	0.047MF	10%	25V
C440	1-163-031-11	CERAMIC CHIP	0.01MF		50V
C441	1-126-962-11	ELECT	3.3MF	20%	50V
C442	1-163-809-11	CERAMIC CHIP	0.047MF	10%	25V
C443	1-163-243-11	CERAMIC CHIP	47PF	5%	50V
C444	1-165-319-11	CERAMIC CHIP	0.1MF		50V
C445	1-163-809-11	CERAMIC CHIP	0.047MF	10%	25V
C446	1-163-089-00	CERAMIC CHIP	6PF	0.25PF	50V
C447	1-163-263-11	CERAMIC CHIP	330PF	5%	50V
C448	1-163-243-11	CERAMIC CHIP	47PF	5%	50V
C449	1-163-227-11	CERAMIC CHIP	10PF	0.5PF	50V
C450	1-163-809-11	CERAMIC CHIP	0.047MF	10%	25V
C451	1-164-004-11	CERAMIC CHIP	0.1MF	10%	25V
C452	1-163-263-11	CERAMIC CHIP	330PF	5%	50V
C453	1-163-031-11	CERAMIC CHIP	0.01MF		50V
C454	1-163-243-11	CERAMIC CHIP	47PF	5%	50V
C455	1-163-263-11	CERAMIC CHIP	330PF	5%	50V
C456	1-163-089-00	CERAMIC CHIP	6PF	0.25PF	50V
C457	1-163-031-11	CERAMIC CHIP	0.01MF		50V
C458	1-163-249-11	CERAMIC CHIP	82PF	5%	50V
C459	1-165-319-11	CERAMIC CHIP	0.1MF		50V
C460	1-164-004-11	CERAMIC CHIP	0.1MF	10%	25V
C461	1-163-119-00	CERAMIC CHIP	120PF	5%	50V
C462	1-163-031-11	CERAMIC CHIP	0.01MF		50V
C463	1-163-031-11	CERAMIC CHIP	0.01MF		50V
C464	1-164-299-11	CERAMIC CHIP	0.22MF	10%	25V
C465	1-163-097-00	CERAMIC CHIP	15PF	5%	50V

The components identified by shading and mark ⚠ are critical for safety.
Replace only with part number specified.

Les composants identifies par une trame et une marque ⚠ sont critiques pour la securite.
Ne les remplacer que par une piece portant le numero specifie.

A (PVM-1350)

REF.NO.	PART NO.	DESCRIPTION			REMARK
C466	1-163-119-00	CERAMIC CHIP 120PF	5%	50V	
C467	1-163-119-00	CERAMIC CHIP 120PF	5%	50V	
C469	1-163-037-11	CERAMIC CHIP 0.022MF	10%	25V	
C470	1-163-243-11	CERAMIC CHIP 47PF	5%	50V	
C471	1-163-105-00	CERAMIC CHIP 33PF	5%	50V	
C472	1-163-031-11	CERAMIC CHIP 0.01MF		50V	
C473	1-163-031-11	CERAMIC CHIP 0.01MF		50V	
C475	1-163-031-11	CERAMIC CHIP 0.01MF		50V	
C476	1-163-031-11	CERAMIC CHIP 0.01MF		50V	
C477	1-164-299-11	CERAMIC CHIP 0.22MF	10%	25V	
C478	1-124-907-11	ELECT 10MF	20%	50V	
C479	1-163-121-00	CERAMIC CHIP 150PF	5%	50V	
C482	1-124-472-11	ELECT 470MF	20%	10V	
C483	1-163-249-11	CERAMIC CHIP 82PF	5%	50V	
C484	1-163-113-00	CERAMIC CHIP 68PF	5%	50V	
C485	1-163-113-00	CERAMIC CHIP 68PF	5%	50V	
C486	1-163-249-11	CERAMIC CHIP 82PF	5%	50V	
C487	1-163-235-11	CERAMIC CHIP 22PF	5%	50V	
C488	1-163-097-00	CERAMIC CHIP 15PF	5%	50V	
C490	1-164-336-11	CERAMIC CHIP 0.33MF		25V	
C491	1-164-336-11	CERAMIC CHIP 0.33MF		25V	
C492	1-164-336-11	CERAMIC CHIP 0.33MF		25V	
C493	1-104-760-11	CERAMIC CHIP 0.047MF	10%	50V	
C494	1-104-760-11	CERAMIC CHIP 0.047MF	10%	50V	
C495	1-124-907-11	ELECT 10MF	20%	50V	
C497	1-163-011-11	CERAMIC CHIP 0.0015MF	10%	50V	
C498	1-124-925-11	ELECT 2.2MF	20%	50V	
C499	1-163-031-11	CERAMIC CHIP 0.01MF		50V	
C500	1-164-004-11	CERAMIC CHIP 0.1MF	10%	25V	
C501	1-164-182-11	CERAMIC CHIP 0.0033MF	10%	50V	
C502	1-163-141-00	CERAMIC CHIP 0.001MF	5%	50V	
C503	1-163-251-11	CERAMIC CHIP 100PF	5%	50V	
C504	1-136-175-00	FILM 0.068MF	5%	50V	
C505	1-163-135-00	CERAMIC CHIP 560PF	5%	50V	
C506	1-124-902-00	ELECT 0.47MF	20%	50V	
C507	1-126-375-11	ELECT 100MF	20%	25V	
C508	1-130-495-00	MYLAR 0.1MF	5%	50V	
C509	1-124-935-11	ELECT 470MF	20%	100V	
C511	1-108-700-11	MYLAR 0.047MF	10%	200V	
C512	1-124-902-00	ELECT 0.47MF	20%	50V	
C513	1-126-096-11	ELECT 10MF	20%	25V	
C514	1-129-718-00	FILM 0.022MF	10%	630V	
C515	1-163-809-11	CERAMIC CHIP 0.047MF	10%	25V	
C516	1-102-030-00	CERAMIC 330PF	10%	500V	
C517	1-163-024-00	CERAMIC CHIP 0.018MF	10%	50V	
C518	1-107-995-51	ELECT 100MF	0	160V	
C519	1-163-017-00	CERAMIC CHIP 0.0047MF	10%	50V	
C520	1-163-257-11	CERAMIC CHIP 180PF	5%	50V	
C521	1-162-114-00	CERAMIC 0.0047MF		2KV	
C522	1-126-375-11	ELECT 100MF	20%	25V	
C523	1-126-801-11	ELECT 1MF	20%	50V	
C525 ⚠	1-136-545-11	FILM 0.0078MF	3%	2KV	
C526 ⚠	1-162-116-91	CERAMIC 680PF	10%	2KV	
C529	1-104-789-51	ELECT 0.47MF	20%	50V	
C530	1-124-120-11	ELECT 220MF	20%	25V	
C531	1-124-477-11	ELECT 47MF	20%	25V	
C532	1-163-031-11	CERAMIC CHIP 0.01MF		50V	
C533	1-102-212-00	CERAMIC 820PF	10%	500V	
C534	1-123-948-00	ELECT 22MF	20%	250V	
C535	1-163-125-00	CERAMIC CHIP 220PF	5%	50V	
C537	1-124-913-11	ELECT 470MF	20%	50V	
C538	1-106-367-00	MYLAR 0.01MF	10%	100V	
C539	1-130-480-00	FILM 0.0056MF	5%	50V	
C540	1-163-133-00	CERAMIC CHIP 470PF	5%	50V	
C541	1-124-927-11	ELECT 4.7MF	20%	50V	
C542	1-106-351-00	MYLAR 0.0022MF	10%	100V	
C543	1-106-351-00	MYLAR 0.0022MF	10%	100V	
C544	1-106-367-00	MYLAR 0.01MF	10%	100V	
C545	1-102-212-00	CERAMIC 820PF	10%	500V	
C547	1-163-251-11	CERAMIC CHIP 100PF	5%	50V	
C548	1-102-212-00	CERAMIC 820PF	10%	500V	
C549	1-124-667-11	ELECT 10MF	20%	50V	
C550	1-126-163-11	ELECT 4.7MF	20%	50V	
C551	1-106-375-12	MYLAR 0.022MF	10%	100V	
C552	1-126-336-11	ELECT 220MF	20%	25V	
C556	1-124-907-11	ELECT 10MF	20%	50V	
C557	1-106-381-12	MYLAR 0.039MF	10%	100V	
C558	1-124-903-11	ELECT 1MF	20%	50V	
C559	1-136-173-00	FILM 0.47MF	5%	50V	
C561	1-136-159-00	FILM 0.033MF	5%	50V	
C562	1-163-249-11	CERAMIC CHIP 82PF	5%	50V	
C564	1-124-907-11	ELECT 10MF	20%	50V	
C565	1-124-903-11	ELECT 1MF	20%	50V	
C566	1-106-367-00	MYLAR 0.01MF	10%	100V	
C568	1-124-903-11	ELECT 1MF	20%	50V	
C569	1-131-351-00	TANTALUM 4.7MF	10%	25V	
C570	1-124-360-00	ELECT 1000MF	20%	16V	
C571	1-164-232-11	CERAMIC CHIP 0.01MF	10%	50V	
C572	1-104-709-11	ELECT 4.7MF	0	160V	
C573	1-136-173-00	FILM 0.47MF	5%	50V	
C574	1-249-383-11	CARBON 1.5	5%	1/4W	F
C575	1-163-031-11	CERAMIC CHIP 0.01MF		50V	
C576	1-102-244-00	CERAMIC 220PF	10%	500V	
C577	1-124-907-11	ELECT 10MF	20%	50V	
C578	1-136-540-11	FILM 0.82MF	5%	200V	
C579	1-126-804-11	ELECT 100MF	20%	50V	
C580	1-136-756-11	FILM 0.24MF	5%	200V	
C581	1-124-927-11	ELECT 4.7MF	20%	50V	
C582	1-102-002-00	CERAMIC 680PF	10%	500V	
C583	1-136-569-11	FILM 1.2MF	5%	200V	
C584	1-123-267-00	ELECT 2.2MF	20%	160V	
C585	1-124-666-11	ELECT 4.7MF	20%	250V	
C586	1-124-557-11	ELECT 1000MF	20%	25V	
C587	1-102-030-00	CERAMIC 330PF	10%	500V	
C588	1-124-667-11	ELECT 10MF	20%	50V	
C589	1-102-030-00	CERAMIC 330PF	10%	500V	
C590	1-126-387-11	ELECT 2.2MF	20%	50V	
C591	1-106-371-00	MYLAR 0.015MF	10%	200V	
C592	1-123-932-00	ELECT 4.7MF	20%	160V	
C593	1-165-319-11	CERAMIC CHIP 0.1MF		50V	
C594	1-163-229-11	CERAMIC CHIP 12PF	5%	50V	
C595	1-126-336-11	ELECT 220MF	20%	25V	
C596	1-124-478-11	ELECT 100MF	20%	25V	
C597	1-164-346-11	CERAMIC CHIP 1MF		16V	
C598	1-164-346-11	CERAMIC CHIP 1MF		16V	
C599	1-126-157-11	ELECT 10MF	20%	16V	
C1300	1-124-477-11	ELECT 47MF	20%	25V	
C1302	1-163-133-00	CERAMIC CHIP 470PF	5%	50V	
C1303	1-164-004-11	CERAMIC CHIP 0.1MF	10%	25V	
C1305	1-124-477-11	ELECT 47MF	20%	25V	
C1307	1-163-031-11	CERAMIC CHIP 0.01MF		50V	
C1308	1-124-907-11	ELECT 10MF	20%	50V	
C1311	1-124-477-11	ELECT 47MF	20%	25V	
C1313	1-163-031-11	CERAMIC CHIP 0.01MF		50V	
C1314	1-124-477-11	ELECT 47MF	20%	25V	
C1316	1-163-031-11	CERAMIC CHIP 0.01MF		50V	
C1317	1-124-477-11	ELECT 47MF	20%	25V	

A (PVM-1350)

REF.NO.	PART NO.	DESCRIPTION				REMARK
C1318	1-124-477-11	ELECT	47MF	20%	25V	
C1319	1-163-037-11	CERAMIC CHIP	0.022MF	10%	25V	
C1320	1-124-477-11	ELECT	47MF	20%	25V	
C1321	1-124-477-11	ELECT	47MF	20%	25V	
C1322	1-124-120-11	ELECT	220MF	20%	16V	
C1323	1-163-031-11	CERAMIC CHIP	0.01MF		50V	
C1324	1-163-031-11	CERAMIC CHIP	0.01MF		50V	
C1326	1-124-477-11	ELECT	47MF	20%	25V	
C1327	1-163-031-11	CERAMIC CHIP	0.01MF		50V	
C1328	1-163-031-11	CERAMIC CHIP	0.01MF		50V	
C1329	1-124-907-11	ELECT	10MF	20%	50V	
C1330	1-163-031-11	CERAMIC CHIP	0.01MF		50V	
C1331	1-124-477-11	ELECT	47MF	20%	25V	
C1332	1-124-477-11	ELECT	47MF	20%	25V	
C1333	1-124-477-11	ELECT	47MF	20%	25V	
C1334	1-163-227-11	CERAMIC CHIP	10PF	0.5PF	50V	
C1335	1-124-477-11	ELECT	47MF	20%	25V	
C1336	1-124-477-11	ELECT	47MF	20%	25V	
C1338	1-163-031-11	CERAMIC CHIP	0.01MF		50V	
C1339	1-163-031-11	CERAMIC CHIP	0.01MF		50V	
C1340	1-163-031-11	CERAMIC CHIP	0.01MF		50V	
C1342	1-102-963-00	CERAMIC	33PF	5%	50V	
C1344	1-163-083-00	CERAMIC CHIP	1PF	0.25PF	50V	
C1345	1-124-907-11	ELECT	10MF	20%	50V	
C1353	1-163-031-11	CERAMIC CHIP	0.01MF		50V	
C1354	1-163-121-00	CERAMIC CHIP	150PF	5%	50V	
C1355	1-163-125-00	CERAMIC CHIP	220PF	5%	50V	
C1356	1-163-235-11	CERAMIC CHIP	22PF	5%	50V	
C1357	1-124-119-00	ELECT	330MF	20%	16V	
C1358	1-124-477-11	ELECT	47MF	20%	25V	
C1359	1-163-263-11	CERAMIC CHIP	330PF	5%	50V	
C1360	1-164-161-11	CERAMIC CHIP	0.0022MF	10%	50V	
C1363	1-163-235-11	CERAMIC CHIP	22PF	5%	50V	
C1365	1-163-227-11	CERAMIC CHIP	10PF	0.5PF	50V	
C1366	1-124-477-11	ELECT	47MF	20%	25V	
C1367	1-124-477-11	ELECT	47MF	20%	25V	
C1372	1-124-477-11	ELECT	47MF	20%	25V	
C1373	1-124-477-11	ELECT	47MF	20%	25V	
C1374	1-124-477-11	ELECT	47MF	20%	25V	
C1375	1-124-927-11	ELECT	4.7MF	20%	50V	
C1400	1-163-031-11	CERAMIC CHIP	0.01MF		50V	
C1401	1-136-173-00	FILM	0.47MF	5%	50V	
C1402	1-163-031-11	CERAMIC CHIP	0.01MF		50V	
C1403	1-136-173-00	FILM	0.47MF	5%	50V	
C1404	1-164-299-11	CERAMIC CHIP	0.22MF	10%	25V	
C1405	1-163-235-11	CERAMIC CHIP	22PF	5%	50V	
C1406	1-163-090-00	CERAMIC CHIP	7PF	0.25PF	50V	
C1407	1-163-085-00	CERAMIC CHIP	2PF	0.25PF	50V	
C1408	1-163-113-00	CERAMIC CHIP	68PF	5%	50V	
C1500	1-124-473-11	ELECT	1000MF	20%	10V	
C1501	1-124-472-11	ELECT	470MF	20%	10V	
C1502	1-101-821-00	CERAMIC	0.0022MF		500V	
C1503	1-164-004-11	CERAMIC CHIP	0.1MF	10%	25V	
C1504	1-124-907-11	ELECT	10MF	20%	50V	
C1506	1-124-119-00	ELECT	330MF	20%	16V	
C1507	1-163-141-00	CERAMIC CHIP	0.001MF	5%	50V	
C1508	1-124-927-11	ELECT	4.7MF	20%	50V	
C1510	1-124-927-11	ELECT	4.7MF	20%	50V	
C1511	1-164-182-11	CERAMIC CHIP	0.0033MF	10%	50V	
C1512	1-124-927-11	ELECT	4.7MF	20%	50V	
C1513	1-163-133-00	CERAMIC CHIP	470PF	5%	50V	
C1514	1-130-477-00	MYLAR	0.0033MF	5%	50V	
C1515	1-124-907-11	ELECT	10MF	20%	50V	
C1516	1-163-063-00	CERAMIC CHIP	0.022MF	10%	50V	
C1517	1-126-101-11	ELECT	100MF	20%	10V	
C1518	1-124-477-11	ELECT	47MF	20%	16V	
C1519	1-163-037-11	CERAMIC CHIP	0.022MF	10%	25V	

<CONNECTOR>

CN101	*1-573-979-11	CONNECTOR, BOARD TO BOARD 11P
CN102	*1-564-514-11	PLUG, CONNECTOR 11P
CN201	*1-564-506-11	PLUG, CONNECTOR 3P
CN301	*1-564-514-11	PLUG, CONNECTOR 11P
CN302	*1-564-510-11	PLUG, CONNECTOR 7P
CN305	*1-565-504-11	CONNECTOR, BOARD TO BOARD 13P
CN401	*1-564-511-51	PLUG, CONNECTOR 8P
CN402	*1-564-515-11	PLUG, CONNECTOR 12P
CN501	*1-580-798-11	CONNECTOR PIN (DY) 6P
CN502	*1-573-964-11	PIN, CONNECTOR (PC BOARD) 6P
CN503	*1-573-964-11	PIN, CONNECTOR (PC BOARD) 6P
CN504	*1-564-508-11	PLUG, CONNECTOR 5P
CN505	*1-564-506-11	PLUG, CONNECTOR 3P
CN506	*1-564-506-11	PLUG, CONNECTOR 3P
CN507	*1-535-419-00	TAB, FASTEN (PCB)

<COMPOSITION CIRCUIT BLOCK>

CP303	1-466-162-61	FILTER BLOCK, COM (CFB-4)

<DIODE>

D101	8-719-800-76	DIODE 1SS226
D102	8-719-800-76	DIODE 1SS226
D103	8-719-045-70	DIODE 1SV230TPH3
D104	8-719-800-76	DIODE 1SS226
D105	8-719-800-76	DIODE 1SS226
D107	8-719-800-76	DIODE 1SS226
D109	8-719-801-78	DIODE 1SS184
D110	8-719-404-46	DIODE MA110
D112	8-719-404-46	DIODE MA110
D113	8-719-158-07	DIODE RD4.7SB
D200	8-719-977-46	DIODE DTZ13C
D300	8-719-025-07	DIODE 1SV232-TPH3
D301	8-719-404-46	DIODE MA110
D302	8-719-158-07	DIODE RD4.7SB
D305	8-719-800-76	DIODE 1SS226
D307	8-719-404-46	DIODE MA110
D309	8-719-404-46	DIODE MA110
D311	8-719-045-70	DIODE 1SV230TPH3
D312	8-719-404-46	DIODE MA110
D313	8-719-801-78	DIODE 1SS184
D315	8-719-404-46	DIODE MA110
D317	8-719-404-46	DIODE MA110
D320	8-719-404-46	DIODE MA110
D322	8-719-404-46	DIODE MA110
D323	8-719-404-46	DIODE MA110
D327	8-719-104-34	DIODE 1S2836
D332	8-719-404-46	DIODE MA110
D338	8-719-404-46	DIODE MA110
D345	8-719-104-34	DIODE 1S2836
D346	8-719-104-34	DIODE 1S2836
D347	8-719-104-34	DIODE 1S2836
D360	8-719-104-34	DIODE 1S2836
D361	8-719-104-34	DIODE 1S2836
D381	8-719-404-46	DIODE MA110
D401	8-719-404-46	DIODE MA110

A (PVM-1350)

REF.NO.	PART NO.	DESCRIPTION	REMARK
D404	8-719-800-76	DIODE 1SS226	
D405	8-719-801-78	DIODE 1SS184	
D406	8-719-404-46	DIODE MA110	
D407	8-719-404-46	DIODE MA110	
D408	8-719-404-46	DIODE MA110	
D410	8-719-404-46	DIODE MA110	
D411	8-719-404-46	DIODE MA110	
D414	8-719-801-78	DIODE 1SS184	
D415	8-719-801-78	DIODE 1SS184	
D416	8-719-801-78	DIODE 1SS184	
D417	8-719-801-78	DIODE 1SS184	
D418	8-719-801-78	DIODE 1SS184	
D421	8-719-404-46	DIODE MA110	
D422	8-719-404-46	DIODE MA110	
D423	8-719-800-76	DIODE 1SS226	
D424	8-719-404-46	DIODE MA110	
D425	8-719-800-76	DIODE 1SS226	
D427	8-719-404-46	DIODE MA110	
D500	8-719-404-46	DIODE MA110	
D501	8-719-977-03	DIODE DTZ5.6B	
D502	8-719-979-80	DIODE UF5406	
D503	8-719-404-46	DIODE MA110	
D504	8-719-901-83	DIODE 1SS83	
D505	8-719-028-72	DIODE RGP02-17EL-6433	
D506	8-719-945-80	DIODE ERC06-15S	
D507	8-719-800-76	DIODE 1SS226	
D508	8-719-800-76	DIODE 1SS226	
D510	8-719-302-43	DIODE EL1Z	
D512	8-719-979-80	DIODE UF5406	
D513	8-719-404-46	DIODE MA110	
D514	8-719-971-20	DIODE ERC38-06	
D515	8-719-971-20	DIODE ERC38-06	
D516	8-719-404-46	DIODE MA110	
D517	8-719-404-46	DIODE MA110	
D518	8-719-404-46	DIODE MA110	
D519	8-719-404-46	DIODE MA110	
D520	8-719-801-78	DIODE 1SS184	
D522	8-719-977-05	DIODE DTZ6.2	
D523	8-719-404-46	DIODE MA110	
D524	8-719-200-02	DIODE 10E-2	
D525	8-719-200-02	DIODE 10E-2	
D526	8-719-404-46	DIODE MA110	
D527	8-719-200-02	DIODE 10E-2	
D528	8-719-300-76	DIODE RH-1A	
D529	8-719-200-02	DIODE 10E-2	
D530	8-719-300-76	DIODE RH-1A	
D531	8-719-977-32	DIODE DTZ11B	
D532	8-719-800-76	DIODE 1SS226	
D533	8-719-302-43	DIODE EL1Z	
D534	8-719-404-46	DIODE MA110	
D535	8-719-404-46	DIODE MA110	
D536	8-719-800-76	DIODE 1SS226	
D538	8-719-800-76	DIODE 1SS226	
D539	8-719-404-46	DIODE MA110	
D540	8-719-404-46	DIODE MA110	

<DELAY LINE>

DL300	1-415-633-11	DELAY LINE, Y	
DL301	1-415-632-11	DELAY LINE, Y	
DL401	1-409-547-11	DELAY LINE	

<IC>

REF.NO.	PART NO.	DESCRIPTION	REMARK
IC101	8-759-196-71	IC UPD78013YCW-Y03	
IC102	8-759-168-37	IC ST24C01B1	
IC103	8-759-008-48	IC MC74HC86F	
IC104	8-759-262-59	IC UPD6451AGT-632-E2	
IC105	8-759-196-70	IC M62358FP-E1	
IC106	8-759-196-70	IC M62358FP-E1	
IC107	8-759-196-70	IC M62358FP-E1	
IC108	8-759-042-02	IC S-80743AL-A7-S	
IC109	8-759-196-70	IC M62358FP-E1	
IC110	8-759-196-70	IC M62358FP-E1	
IC111	8-759-009-22	IC MC14094BF	
IC200	8-759-420-04	IC AN5265	
IC302	8-759-998-98	IC LM358D	
IC304	8-759-509-19	IC XRU4053BF-E2	
IC305	8-759-631-08	IC M51279FP	
IC306	8-759-711-32	IC NJM2245M	
IC309	8-759-711-32	IC NJM2245M	
IC310	8-759-509-19	IC XRU4053BF-E2	
IC311	8-759-509-05	IC XRU4066BF	
IC312	8-759-711-32	IC NJM2245M	
IC313	8-759-048-09	IC MM1148XF	
IC314	8-759-501-21	IC MM1149XF	
IC318	8-759-509-57	IC XRU4584BF	
IC320	8-759-501-21	IC MM1149XF	
IC321	8-759-501-21	IC MM1149XF	
IC322	8-759-501-21	IC MM1149XF	
IC323	8-759-501-21	IC MM1149XF	
IC324	8-759-501-21	IC MM1149XF	
IC325	8-759-501-21	IC MM1149XF	
IC326	8-759-998-96	IC LM324D	
IC350	8-759-100-96	IC UPC4558G2	
IC401	8-759-196-69	IC BA7655AF-E2	
IC402	8-752-053-21	IC CXA1211M	
IC403	8-759-509-05	IC XRU4066BF	
IC404	8-752-052-62	IC CXA1478S	
IC405	8-759-509-19	IC XRU4053BF-E2	
IC406	8-759-998-98	IC LM358D	
IC407	8-759-509-05	IC XRU4066BF	
IC408	8-759-509-91	IC XRA10393F	
IC409	8-759-998-96	IC LM324D	
IC410	8-759-932-64	IC BU4052BF	
IC411	8-759-008-92	IC MC14024BF	
IC412	8-759-509-19	IC XRU4053BF-E2	
IC413	8-759-509-19	IC XRU4053BF-E2	
IC500	8-749-010-07	IC H8D7248	
IC502	8-759-009-51	IC MC14538BF	
IC503	8-759-009-51	IC MC14538BF	
IC504	8-752-053-21	IC CXA1211M	
IC505	8-759-520-07	IC XRA17812T	
IC507	8-759-100-60	IC UPC1377C	
IC508	8-752-053-21	IC CXA1211M	
IC509	8-759-998-98	IC LM358D	

<COIL>

L101	1-408-609-41	INDUCTOR	33UH
L102	1-408-417-00	INDUCTOR	47UH
L104	1-410-478-11	INDUCTOR	47UH
L300	1-410-478-11	INDUCTOR	47UH
L305	1-410-196-11	INDUCTOR CHIP	2.2UH
L308	1-410-466-41	INDUCTOR	4.7UH
L309	1-410-470-11	INDUCTOR	10UH
L311	1-410-470-11	INDUCTOR	10UH
L312	1-412-011-31	INDUCTOR CHIP	27UH

A (PVM-1350)

Les composants identifies par une trame et une marque ⚠ sont critiques pour la securite. Ne les remplacer que par une piece portant le numero specifie.

The components identified by shading and mark ⚠ are critical for safety. Replace only with part number specified.

REF.NO.	PART NO.	DESCRIPTION	REMARK
L314	1-412-011-31	INDUCTOR CHIP 27UH	
L316	1-412-011-31	INDUCTOR CHIP 27UH	
L320	1-410-478-11	INDUCTOR 47UH	
L401	1-410-478-11	INDUCTOR 47UH	
L402	1-410-216-31	INDUCTOR CHIP 100UH	
L403	1-410-216-31	INDUCTOR CHIP 100UH	
L404	1-410-216-31	INDUCTOR CHIP 100UH	
L405	1-408-419-00	INDUCTOR 68UH	
L406	1-408-419-00	INDUCTOR 68UH	
L407	1-408-413-00	INDUCTOR 22UH	
L408	1-408-413-00	INDUCTOR 22UH	
L409	1-410-214-31	INDUCTOR CHIP 68UH	
L500	1-459-155-00	COIL (WITH CORE) 45UH	
L501	1-407-365-00	COIL, CHOKE	
L502	1-407-365-00	COIL, CHOKE	
L503	1-410-093-11	INDUCTOR 33MMH	
L504	1-410-666-31	INDUCTOR 18UH	
L505	1-410-671-31	INDUCTOR 47UH	
L507	1-410-686-11	INDUCTOR 1MMH	
L508	1-412-530-31	INDUCTOR 27UH	
L509	1-459-075-00	COIL, DYNAMIC CONVERSION CHOKE	
L511	1-459-106-00	COIL, DUST CORE	
L512	1-459-155-00	COIL (WITH CORE) 45UH	
L513	1-412-447-11	INDUCTOR 3.9MMH	
L514	1-459-104-00	COIL, DUST CORE	
L515	1-459-059-00	COIL, DUST CORE	
L516	⚠ 1-459-760-13	COIL, HORIZONTAL LINEARITY	
L517	1-412-547-21	INDUCTOR 680UH	
		<NEON LAMP>	
NL500	1-519-526-11	LAMP, NEON	
		<TRANSISTOR>	
Q101	8-729-901-01	TRANSISTOR DTC144EK	
Q107	8-729-901-06	TRANSISTOR DTA144EK	
Q108	8-729-120-28	TRANSISTOR 2SC1623-L5L6	
Q109	8-729-120-28	TRANSISTOR 2SC1623-L5L6	
Q110	8-729-120-28	TRANSISTOR 2SC1623-L5L6	
Q111	8-729-901-06	TRANSISTOR DTA144EK	
Q112	8-729-120-28	TRANSISTOR 2SC1623-L5L6	
Q113	8-729-120-28	TRANSISTOR 2SC1623-L5L6	
Q114	8-729-119-78	TRANSISTOR 2SC2785-HFE	
Q200	8-729-140-96	TRANSISTOR 2SD774-34	
Q201	8-729-120-28	TRANSISTOR 2SC1623-L5L6	
Q300	8-729-120-28	TRANSISTOR 2SC1623-L5L6	
Q301	8-729-120-28	TRANSISTOR 2SC1623-L5L6	
Q303	8-729-120-28	TRANSISTOR 2SC1623-L5L6	
Q304	8-729-120-28	TRANSISTOR 2SC1623-L5L6	
Q305	8-729-120-28	TRANSISTOR 2SC1623-L5L6	
Q307	8-729-120-28	TRANSISTOR 2SC1623-L5L6	
Q308	8-729-120-28	TRANSISTOR 2SC1623-L5L6	
Q309	8-729-216-22	TRANSISTOR 2SA1162-G	
Q311	8-729-216-22	TRANSISTOR 2SA1162-G	
Q312	8-729-120-28	TRANSISTOR 2SC1623-L5L6	
Q313	8-729-216-22	TRANSISTOR 2SA1162-G	
Q315	8-729-216-22	TRANSISTOR 2SA1162-G	
Q316	8-729-120-28	TRANSISTOR 2SC1623-L5L6	
Q317	8-729-120-28	TRANSISTOR 2SC1623-L5L6	
Q318	8-729-216-22	TRANSISTOR 2SA1162-G	
Q319	8-729-120-28	TRANSISTOR 2SC1623-L5L6	
Q320	8-729-119-78	TRANSISTOR 2SC2785-HFE	
Q321	8-729-120-28	TRANSISTOR 2SC1623-L5L6	
Q322	8-729-120-28	TRANSISTOR 2SC1623-L5L6	
Q325	8-729-120-28	TRANSISTOR 2SC1623-L5L6	
Q326	8-729-120-28	TRANSISTOR 2SC1623-L5L6	
Q327	8-729-216-22	TRANSISTOR 2SA1162-G	
Q329	8-729-141-53	TRANSISTOR 2SK94-X2X3X4	
Q330	8-729-216-22	TRANSISTOR 2SA1162-G	
Q331	8-729-216-22	TRANSISTOR 2SA1162-G	
Q333	8-729-120-28	TRANSISTOR 2SC1623-L5L6	
Q341	8-729-920-39	TRANSISTOR IMT1US	
Q342	8-729-920-39	TRANSISTOR IMT1US	
Q343	8-729-920-39	TRANSISTOR IMT1US	
Q345	8-729-120-28	TRANSISTOR 2SC1623-L5L6	
Q350	8-729-216-22	TRANSISTOR 2SA1162-G	
Q351	8-729-120-28	TRANSISTOR 2SC1623-L5L6	
Q352	8-729-120-28	TRANSISTOR 2SC1623-L5L6	
Q353	8-729-120-28	TRANSISTOR 2SC1623-L5L6	
Q354	8-729-120-28	TRANSISTOR 2SC1623-L5L6	
Q360	8-729-907-26	TRANSISTOR IMX1	
Q361	8-729-901-06	TRANSISTOR DTA144EK	
Q363	8-729-120-28	TRANSISTOR 2SC1623-L5L6	
Q364	8-729-901-01	TRANSISTOR DTC144EK	
Q365	8-729-901-01	TRANSISTOR DTC144EK	
Q372	8-729-901-01	TRANSISTOR DTC144EK	
Q401	8-729-120-28	TRANSISTOR 2SC1623-L5L6	
Q402	8-729-120-28	TRANSISTOR 2SC1623-L5L6	
Q403	8-729-901-01	TRANSISTOR DTC144EK	
Q404	8-729-216-22	TRANSISTOR 2SA1162-G	
Q405	8-729-216-22	TRANSISTOR 2SA1162-G	
Q406	8-729-120-28	TRANSISTOR 2SC1623-L5L6	
Q407	8-729-120-28	TRANSISTOR 2SC1623-L5L6	
Q408	8-729-216-22	TRANSISTOR 2SA1162-G	
Q409	8-729-216-22	TRANSISTOR 2SA1162-G	
Q410	8-729-907-26	TRANSISTOR IMX1	
Q411	8-729-120-28	TRANSISTOR 2SC1623-L5L6	
Q412	8-729-216-22	TRANSISTOR 2SA1162-G	
Q413	8-729-141-53	TRANSISTOR 2SK94-X2X3X4	
Q414	8-729-216-22	TRANSISTOR 2SA1162-G	
Q415	8-729-216-22	TRANSISTOR 2SA1162-G	
Q416	8-729-216-22	TRANSISTOR 2SA1162-G	
Q417	8-729-216-22	TRANSISTOR 2SA1162-G	
Q418	8-729-120-28	TRANSISTOR 2SC1623-L5L6	
Q419	8-729-216-22	TRANSISTOR 2SA1162-G	
Q420	8-729-216-22	TRANSISTOR 2SA1162-G	
Q421	8-729-901-01	TRANSISTOR DTC144EK	
Q422	8-729-120-28	TRANSISTOR 2SC1623-L5L6	
Q423	8-729-120-28	TRANSISTOR 2SC1623-L5L6	
Q424	8-729-901-01	TRANSISTOR DTC144EK	
Q425	8-729-901-01	TRANSISTOR DTC144EK	
Q426	8-729-901-01	TRANSISTOR DTC144EK	
Q428	8-729-216-22	TRANSISTOR 2SA1162-G	
Q429	8-729-216-22	TRANSISTOR 2SA1162-G	
Q430	8-729-120-28	TRANSISTOR 2SC1623-L5L6	
Q431	8-729-120-28	TRANSISTOR 2SC1623-L5L6	
Q432	8-729-120-28	TRANSISTOR 2SC1623-L5L6	
Q433	8-729-901-01	TRANSISTOR DTC144EK	
Q434	8-729-120-28	TRANSISTOR 2SC1623-L5L6	
Q435	8-729-901-01	TRANSISTOR DTC144EK	
Q436	8-729-901-01	TRANSISTOR DTC144EK	
Q437	8-729-901-01	TRANSISTOR DTC144EK	
Q438	8-729-120-28	TRANSISTOR 2SC1623-L5L6	
Q439	8-729-216-22	TRANSISTOR 2SA1162-G	
Q440	8-729-120-28	TRANSISTOR 2SC1623-L5L6	
Q441	8-729-141-53	TRANSISTOR 2SK94-X2X3X4	

A (PVM-1350)

REF.NO.	PART NO.	DESCRIPTION	REMARK
Q442	8-729-120-28	TRANSISTOR 2SC1623-L5L6	
Q443	8-729-216-22	TRANSISTOR 2SA1162-G	
Q444	8-729-120-28	TRANSISTOR 2SC1623-L5L6	
Q445	8-729-901-01	TRANSISTOR DTC144EK	
Q500	8-729-216-22	TRANSISTOR 2SA1162-G	
Q501	8-729-800-35	TRANSISTOR 2SD1397-CA	
Q502	8-729-119-80	TRANSISTOR 2SC2688-LK	
Q503	8-729-313-42	TRANSISTOR 2SD1134-C	
Q504	8-729-120-28	TRANSISTOR 2SC1623-L5L6	
Q505	8-729-120-28	TRANSISTOR 2SC1623-L5L6	
Q506	8-729-120-28	TRANSISTOR 2SC1623-L5L6	
Q507	8-729-120-28	TRANSISTOR 2SC1623-L5L6	
Q508	8-729-216-22	TRANSISTOR 2SA1162-G	
Q511	8-729-120-28	TRANSISTOR 2SC1623-L5L6	
Q512	8-729-195-82	TRANSISTOR 2SC2958-L	
Q513	8-729-122-03	TRANSISTOR 2SA1220A-P	
Q515	8-729-169-02	TRANSISTOR 2SC2690A-Q	
Q517	8-729-901-06	TRANSISTOR DTA144EK	
Q519	8-729-901-01	TRANSISTOR DTC144EK	
Q520	8-729-905-67	TRANSISTOR 2SD1944-K	
Q522	8-729-120-28	TRANSISTOR 2SC1623-L5L6	
Q523	8-729-120-28	TRANSISTOR 2SC1623-L5L6	
Q524	8-729-119-78	TRANSISTOR 2SC2785-HFE	
Q525	8-729-119-76	TRANSISTOR 2SA1175-HFE	
Q526	8-729-216-22	TRANSISTOR 2SA1162-G	
Q527	8-729-120-28	TRANSISTOR 2SC1623-L5L6	

<RESISTOR>

REF.NO.	PART NO.	DESCRIPTION				REMARK
JR122	1-216-295-00	METAL GLAZE	0	5%	1/10W	
JR123	1-216-295-00	METAL GLAZE	0	5%	1/10W	
JR302	1-216-295-00	METAL GLAZE	0	5%	1/10W	
JR306	1-216-295-00	METAL GLAZE	0	5%	1/10W	
R101	1-216-025-00	METAL GLAZE	100	5%	1/10W	
R102	1-216-025-00	METAL GLAZE	100	5%	1/10W	
R103	1-216-025-00	METAL GLAZE	100	5%	1/10W	
R104	1-216-073-00	METAL GLAZE	10K	5%	1/10W	
R105	1-216-059-00	METAL GLAZE	2.7K	5%	1/10W	
R106	1-216-065-00	METAL GLAZE	4.7K	5%	1/10W	
R108	1-216-065-00	METAL GLAZE	4.7K	5%	1/10W	
R109	1-216-065-00	METAL GLAZE	4.7K	5%	1/10W	
R110	1-216-073-00	METAL GLAZE	10K	5%	1/10W	
R111	1-216-295-00	METAL GLAZE	0	5%	1/10W	
R112	1-216-295-00	METAL GLAZE	0	5%	1/10W	
R113	1-216-085-00	METAL GLAZE	33K	5%	1/10W	
R114	1-216-295-00	METAL GLAZE	0	5%	1/10W	
R115	1-216-295-00	METAL GLAZE	0	5%	1/10W	
R116	1-218-761-11	METAL CHIP	240K	0.50%	1/10W	
R117	1-216-089-91	METAL GLAZE	47K	5%	1/10W	
R118	1-216-295-00	METAL GLAZE	0	5%	1/10W	
R119	1-216-689-11	METAL GLAZE	39K	5%	1/10W	
R120	1-216-295-00	METAL GLAZE	0	5%	1/10W	
R121	1-216-295-00	METAL GLAZE	0	5%	1/10W	
R123	1-216-295-00	METAL GLAZE	0	5%	1/10W	
R125	1-216-295-00	METAL GLAZE	0	5%	1/10W	
R128	1-216-295-00	METAL GLAZE	0	5%	1/10W	
R129	1-216-295-00	METAL GLAZE	0	5%	1/10W	
R130	1-216-101-00	METAL GLAZE	150K	5%	1/10W	
R131	1-216-295-00	METAL GLAZE	0	5%	1/10W	
R132	1-216-065-00	METAL GLAZE	4.7K	5%	1/10W	
R134	1-216-065-00	METAL GLAZE	4.7K	5%	1/10W	
R136	1-216-295-00	METAL GLAZE	0	5%	1/10W	
R137	1-216-065-00	METAL GLAZE	4.7K	5%	1/10W	
R138	1-216-295-00	METAL GLAZE	0	5%	1/10W	
R139	1-216-295-00	METAL GLAZE	0	5%	1/10W	
R140	1-216-033-00	METAL GLAZE	220	5%	1/10W	
R141	1-216-085-00	METAL GLAZE	33K	5%	1/10W	
R142	1-216-295-00	METAL GLAZE	0	5%	1/10W	
R143	1-216-295-00	METAL GLAZE	0	5%	1/10W	
R144	1-216-295-00	METAL GLAZE	0	5%	1/10W	
R147	1-216-295-00	METAL GLAZE	0	5%	1/10W	
R149	1-216-065-00	METAL GLAZE	4.7K	5%	1/10W	
R150	1-216-295-00	METAL GLAZE	0	5%	1/10W	
R151	1-216-061-00	METAL GLAZE	3.3K	5%	1/10W	
R153	1-216-295-00	METAL GLAZE	0	5%	1/10W	
R154	1-216-065-00	METAL GLAZE	4.7K	5%	1/10W	
R155	1-249-434-11	CARBON	27K	5%	1/4W	
R157	1-216-065-00	METAL GLAZE	4.7K	5%	1/10W	
R159	1-216-063-00	METAL GLAZE	3.9K	5%	1/10W	
R160	1-216-061-00	METAL GLAZE	3.3K	5%	1/10W	
R162	1-216-065-00	METAL GLAZE	4.7K	5%	1/10W	
R163	1-216-065-00	METAL GLAZE	4.7K	5%	1/10W	
R164	1-216-067-00	METAL GLAZE	5.6K	5%	1/10W	
R165	1-216-295-00	METAL GLAZE	0	5%	1/10W	
R167	1-216-061-00	METAL GLAZE	3.3K	5%	1/10W	
R170	1-216-295-00	METAL GLAZE	0	5%	1/10W	
R173	1-216-295-00	METAL GLAZE	0	5%	1/10W	
R175	1-216-295-00	METAL GLAZE	0	5%	1/10W	
R177	1-216-065-00	METAL GLAZE	4.7K	5%	1/10W	
R180	1-216-295-00	METAL GLAZE	0	5%	1/10W	
R181	1-216-065-00	METAL GLAZE	4.7K	5%	1/10W	
R183	1-216-295-00	METAL GLAZE	0	5%	1/10W	
R185	1-216-073-00	METAL GLAZE	10K	5%	1/10W	
R187	1-216-061-00	METAL GLAZE	3.3K	5%	1/10W	
R188	1-216-295-00	METAL GLAZE	0	5%	1/10W	
R189	1-216-073-00	METAL GLAZE	10K	5%	1/10W	
R190	1-216-049-00	METAL GLAZE	1K	5%	1/10W	
R192	1-216-073-00	METAL GLAZE	10K	5%	1/10W	
R193	1-216-295-00	METAL GLAZE	0	5%	1/10W	
R195	1-216-071-00	METAL GLAZE	8.2K	5%	1/10W	
R197	1-216-061-00	METAL GLAZE	3.3K	5%	1/10W	
R198	1-216-295-00	METAL GLAZE	0	5%	1/10W	
R199	1-216-295-00	METAL GLAZE	0	5%	1/10W	
R200	1-216-684-11	METAL CHIP	24K	0.50%	1/10W	
R201	1-216-049-00	METAL GLAZE	1K	5%	1/10W	
R202	1-212-857-00	FUSIBLE	10	5%	1/4W	F
R203	1-260-095-11	CARBON	470	5%	1/2W	
R204	1-260-072-11	CARBON	4.7	5%	1/2W	
R205	1-216-647-11	METAL CHIP	680	0.50%	1/10W	
R206	1-216-073-00	METAL GLAZE	10K	5%	1/10W	
R207	1-216-065-00	METAL GLAZE	4.7K	5%	1/10W	
R208	1-216-065-00	METAL GLAZE	4.7K	5%	1/10W	
R209	1-216-073-00	METAL GLAZE	10K	5%	1/10W	
R210	1-216-061-00	METAL GLAZE	3.3K	5%	1/10W	
R211	1-249-393-11	CARBON	10	5%	1/4W	F
R237	1-216-089-91	METAL GLAZE	47K	5%	1/10W	
R302	1-216-025-00	METAL GLAZE	100	5%	1/10W	
R304	1-216-025-00	METAL GLAZE	100	5%	1/10W	
R307	1-216-115-00	METAL GLAZE	560K	5%	1/10W	
R308	1-216-065-00	METAL GLAZE	4.7K	5%	1/10W	
R312	1-216-073-00	METAL GLAZE	10K	5%	1/10W	
R313	1-216-649-11	METAL CHIP	820	0.50%	1/10W	
R314	1-216-099-00	METAL GLAZE	120K	5%	1/10W	
R315	1-216-099-00	METAL GLAZE	120K	5%	1/10W	
R316	1-216-049-00	METAL GLAZE	1K	5%	1/10W	
R317	1-216-057-00	METAL GLAZE	2.2K	5%	1/10W	
R318	1-216-049-00	METAL GLAZE	1K	5%	1/10W	

A (PVM-1350)

REF.NO.	PART NO.	DESCRIPTION				REMARK
R320	1-216-057-00	METAL GLAZE	2.2K	5%	1/10W	
R321	1-216-051-00	METAL GLAZE	1.2K	5%	1/10W	
R322	1-216-035-00	METAL GLAZE	270	5%	1/10W	
R323	1-216-109-00	METAL GLAZE	330K	5%	1/10W	
R324	1-216-101-00	METAL GLAZE	150K	5%	1/10W	
R325	1-216-037-00	METAL GLAZE	330	5%	1/10W	
R326	1-216-033-00	METAL GLAZE	220	5%	1/10W	
R328	1-216-121-00	METAL GLAZE	1M	5%	1/10W	
R329	1-216-055-00	METAL GLAZE	1.8K	5%	1/10W	
R330	1-216-089-91	METAL GLAZE	47K	5%	1/10W	
R331	1-216-093-00	METAL GLAZE	68K	5%	1/10W	
R334	1-216-093-00	METAL GLAZE	68K	5%	1/10W	
R335	1-216-083-00	METAL GLAZE	27K	5%	1/10W	
R336	1-216-065-00	METAL GLAZE	4.7K	5%	1/10W	
R342	1-216-065-00	METAL GLAZE	4.7K	5%	1/10W	
R345	1-216-063-00	METAL GLAZE	3.9K	5%	1/10W	
R346	1-216-057-00	METAL GLAZE	2.2K	5%	1/10W	
R350	1-216-085-00	METAL GLAZE	33K	5%	1/10W	
R366	1-216-065-00	METAL GLAZE	4.7K	5%	1/10W	
R376	1-216-111-00	METAL GLAZE	390K	5%	1/10W	
R378	1-216-111-00	METAL GLAZE	390K	5%	1/10W	
R382	1-216-107-00	METAL GLAZE	270K	5%	1/10W	
R387	1-216-029-00	METAL GLAZE	150	5%	1/10W	
R388	1-216-033-00	METAL GLAZE	220	5%	1/10W	
R393	1-216-073-00	METAL GLAZE	10K	5%	1/10W	
R394	1-216-083-00	METAL GLAZE	27K	5%	1/10W	
R397	1-216-113-00	METAL GLAZE	470K	5%	1/10W	
R398	1-216-105-00	METAL GLAZE	220K	5%	1/10W	
R399	1-216-111-00	METAL GLAZE	390K	5%	1/10W	
R401	1-216-053-00	METAL GLAZE	1.5K	5%	1/10W	
R402	1-216-053-00	METAL GLAZE	1.5K	5%	1/10W	
R403	1-216-069-00	METAL GLAZE	6.8K	5%	1/10W	
R406	1-216-083-00	METAL GLAZE	27K	5%	1/10W	
R407	1-216-085-00	METAL GLAZE	33K	5%	1/10W	
R408	1-216-689-11	METAL CHIP	39K	0.50%	1/10W	
R410	1-216-069-00	METAL GLAZE	6.8K	5%	1/10W	
R411	1-216-033-00	METAL GLAZE	220	5%	1/10W	
R412	1-216-089-91	METAL GLAZE	47K	5%	1/10W	
R413	1-216-668-11	METAL CHIP	5.1K	0.50%	1/10W	
R416	1-216-113-00	METAL GLAZE	470K	5%	1/10W	
R417	1-216-665-11	METAL CHIP	3.9K	0.50%	1/10W	
R418	1-216-667-11	METAL CHIP	4.7K	0.50%	1/10W	
R419	1-216-065-00	METAL GLAZE	4.7K	5%	1/10W	
R420	1-216-689-11	METAL GLAZE	39K	5%	1/10W	
R422	1-216-073-00	METAL GLAZE	10K	5%	1/10W	
R423	1-216-073-00	METAL GLAZE	10K	5%	1/10W	
R424	1-216-033-00	METAL GLAZE	220	5%	1/10W	
R425	1-216-049-00	METAL GLAZE	1K	5%	1/10W	
R426	1-216-039-00	METAL GLAZE	390	5%	1/10W	
R427	1-216-033-00	METAL GLAZE	220	5%	1/10W	
R428	1-216-097-00	METAL GLAZE	100K	5%	1/10W	
R429	1-216-073-00	METAL GLAZE	10K	5%	1/10W	
R430	1-216-119-00	METAL GLAZE	820K	5%	1/10W	
R431	1-216-097-00	METAL GLAZE	100K	5%	1/10W	
R432	1-216-089-91	METAL GLAZE	47K	5%	1/10W	
R434	1-216-109-00	METAL GLAZE	330K	5%	1/10W	
R435	1-216-105-00	METAL GLAZE	220K	5%	1/10W	
R436	1-216-113-00	METAL GLAZE	470K	5%	1/10W	
R437	1-216-097-00	METAL GLAZE	100K	5%	1/10W	
R438	1-216-053-00	METAL GLAZE	1.5K	5%	1/10W	
R439	1-216-033-00	METAL GLAZE	220	5%	1/10W	
R440	1-216-049-00	METAL GLAZE	1K	5%	1/10W	
R441	1-216-645-11	METAL CHIP	560	0.50%	1/10W	
R442	1-216-647-11	METAL CHIP	680	0.50%	1/10W	
R443	1-216-049-00	METAL GLAZE	1K	5%	1/10W	
R444	1-216-105-00	METAL GLAZE	220K	5%	1/10W	
R445	1-216-095-00	METAL GLAZE	82K	5%	1/10W	
R447	1-216-069-00	METAL GLAZE	6.8K	5%	1/10W	
R448	1-216-049-00	METAL GLAZE	1K	5%	1/10W	
R449	1-216-073-00	METAL GLAZE	10K	5%	1/10W	
R450	1-216-121-00	METAL GLAZE	1M	5%	1/10W	
R451	1-216-037-00	METAL GLAZE	330	5%	1/10W	
R452	1-216-651-11	METAL CHIP	1K	0.50%	1/10W	
R453	1-216-097-00	METAL GLAZE	100K	5%	1/10W	
R455	1-216-085-00	METAL GLAZE	33K	5%	1/10W	
R456	1-216-053-00	METAL GLAZE	1.5K	5%	1/10W	
R457	1-216-025-00	METAL GLAZE	100	5%	1/10W	
R458	1-216-113-00	METAL GLAZE	470K	5%	1/10W	
R459	1-216-649-11	METAL CHIP	820	0.50%	1/10W	
R460	1-216-073-00	METAL GLAZE	10K	5%	1/10W	
R462	1-216-651-11	METAL CHIP	1K	0.50%	1/10W	
R463	1-216-065-00	METAL GLAZE	4.7K	5%	1/10W	
R464	1-216-065-00	METAL GLAZE	4.7K	5%	1/10W	
R465	1-216-025-00	METAL GLAZE	100	5%	1/10W	
R466	1-216-077-00	METAL GLAZE	15K	5%	1/10W	
R467	1-216-121-00	METAL GLAZE	1M	5%	1/10W	
R468	1-216-105-00	METAL GLAZE	220K	5%	1/10W	
R469	1-216-063-00	METAL GLAZE	3.9K	5%	1/10W	
R470	1-216-069-00	METAL GLAZE	6.8K	5%	1/10W	
R471	1-216-109-00	METAL GLAZE	330K	5%	1/10W	
R472	1-216-077-00	METAL GLAZE	15K	5%	1/10W	
R473	1-216-121-00	METAL GLAZE	1M	5%	1/10W	
R474	1-216-649-11	METAL CHIP	820	0.50%	1/10W	
R475	1-216-025-00	METAL GLAZE	100	5%	1/10W	
R476	1-216-061-00	METAL GLAZE	3.3K	5%	1/10W	
R477	1-216-061-00	METAL GLAZE	3.3K	5%	1/10W	
R478	1-216-073-00	METAL GLAZE	10K	5%	1/10W	
R479	1-216-085-00	METAL GLAZE	33K	5%	1/10W	
R480	1-216-077-00	METAL GLAZE	15K	5%	1/10W	
R481	1-216-033-00	METAL GLAZE	220	5%	1/10W	
R482	1-216-057-00	METAL GLAZE	2.2K	5%	1/10W	
R483	1-216-025-00	METAL GLAZE	100	5%	1/10W	
R484	1-216-651-11	METAL CHIP	1K	0.50%	1/10W	
R485	1-216-033-00	METAL GLAZE	220	5%	1/10W	
R486	1-216-681-11	METAL CHIP	18K	0.50%	1/10W	
R487	1-216-653-11	METAL CHIP	1.2K	0.50%	1/10W	
R488	1-216-073-00	METAL GLAZE	10K	5%	1/10W	
R489	1-216-077-00	METAL GLAZE	15K	5%	1/10W	
R490	1-216-057-00	METAL GLAZE	2.2K	5%	1/10W	
R491	1-216-061-00	METAL GLAZE	3.3K	5%	1/10W	
R492	1-216-085-00	METAL GLAZE	33K	5%	1/10W	
R493	1-216-295-00	METAL GLAZE	0	5%	1/10W	
R494	1-216-085-00	METAL GLAZE	33K	5%	1/10W	
R495	1-216-651-11	METAL CHIP	1K	0.50%	1/10W	
R496	1-216-073-00	METAL GLAZE	10K	5%	1/10W	
R497	1-216-653-11	METAL CHIP	1.2K	0.50%	1/10W	
R498	1-216-061-00	METAL GLAZE	3.3K	5%	1/10W	
R499	1-216-033-00	METAL GLAZE	220	5%	1/10W	
R500	1-216-689-11	METAL GLAZE	39K	5%	1/10W	
R502	1-216-677-11	METAL CHIP	12K	0.50%	1/10W	
R503	1-216-677-11	METAL CHIP	12K	0.50%	1/10W	
R504	1-216-111-00	METAL GLAZE	390K	5%	1/10W	
R505	1-216-067-00	METAL GLAZE	5.6K	5%	1/10W	
R506	1-216-073-00	METAL GLAZE	10K	5%	1/10W	
R507	1-216-083-00	METAL GLAZE	27K	5%	1/10W	
R508	1-216-105-00	METAL GLAZE	220K	5%	1/10W	
R509	1-216-089-91	METAL GLAZE	47K	5%	1/10W	

A (PVM-1350)

REF.NO.	PART NO.	DESCRIPTION				REMARK
R510	1-216-097-00	METAL GLAZE	100K	5%	1/10W	
R511	1-216-099-00	METAL GLAZE	120K	5%	1/10W	
R512	1-216-055-00	METAL GLAZE	1.8K	5%	1/10W	
R513	1-216-295-00	METAL GLAZE	0	5%	1/10W	
R514	1-216-295-00	METAL GLAZE	0	5%	1/10W	
R515	1-216-675-11	METAL CHIP	10K	0.50%	1/10W	
R516	1-216-697-11	METAL CHIP	82K	0.50%	1/10W	
R517	1-214-888-00	METAL	10K	1%	1/2W	
R518	1-260-123-11	CARBON	100K	5%	1/2W	
R519	1-216-017-00	METAL GLAZE	47	5%	1/10W	
R520	1-249-423-11	CARBON	3.3K	5%	1/4W	F
R521	1-216-065-00	METAL GLAZE	4.7K	5%	1/10W	
R522	1-260-111-11	CARBON	10K	5%	1/2W	
R523	1-215-892-11	METAL OXIDE	1K	5%	2W	F
R524	1-216-093-00	METAL GLAZE	68K	5%	1/10W	
R525	1-216-069-00	METAL GLAZE	6.8K	5%	1/10W	
R528	1-216-089-91	METAL GLAZE	47K	5%	1/10W	
R529	1-216-089-91	METAL GLAZE	47K	5%	1/10W	
R530	1-216-367-11	METAL OXIDE	0.68	5%	2W	F
R531	1-216-077-00	METAL GLAZE	15K	5%	1/10W	
R532	1-215-919-71	METAL OXIDE	2.2K	5%	3W	F
R533	1-247-723-11	CARBON	6.8K	5%	1/4W	F
R534	1-216-085-00	METAL GLAZE	33K	5%	1/10W	
R535	1-249-448-11	CARBON	1.2	5%	1/4W	F
R538	1-216-077-00	METAL GLAZE	15K	5%	1/10W	
R539	1-216-065-00	METAL GLAZE	4.7K	5%	1/10W	
R540	1-216-113-00	METAL GLAZE	470K	5%	1/10W	
R541	1-249-383-11	CARBON	1.5	5%	1/4W	F
R542	1-216-057-00	METAL GLAZE	2.2K	5%	1/10W	
R543	1-212-883-00	FUSIBLE	120	5%	1/4W	F
R544	1-216-095-00	METAL GLAZE	82K	5%	1/10W	
R545	1-216-073-00	METAL GLAZE	10K	5%	1/10W	
R546	1-249-425-11	CARBON	4.7K	5%	1/4W	F
R548	1-216-057-00	METAL GLAZE	2.2K	5%	1/10W	
R549	1-216-677-11	METAL CHIP	12K	0.50%	1/10W	
R550	1-216-053-00	METAL GLAZE	1.5K	5%	1/10W	
R551	1-216-077-00	METAL GLAZE	15K	5%	1/10W	
R552	1-216-033-00	METAL GLAZE	220	5%	1/10W	
R553	1-216-083-00	METAL GLAZE	27K	5%	1/10W	
R554	1-216-095-00	METAL GLAZE	82K	5%	1/10W	
R555	1-216-692-11	METAL CHIP	51K	0.50%	1/10W	
R556	1-216-464-11	METAL OXIDE	18K	5%	2W	F
R557	1-216-081-00	METAL GLAZE	22K	5%	1/10W	
R558	1-247-711-11	CARBON	680	5%	1/4W	F
R559	1-216-109-00	METAL GLAZE	330K	5%	1/10W	
R560	1-216-091-00	METAL GLAZE	56K	5%	1/10W	
R561	1-216-049-00	METAL GLAZE	1K	5%	1/10W	
R563	1-216-017-00	METAL GLAZE	47	5%	1/10W	
R564	1-216-107-00	METAL GLAZE	270K	5%	1/10W	
R565	1-216-033-00	METAL GLAZE	220	5%	1/10W	
R567	1-216-081-00	METAL GLAZE	22K	5%	1/10W	
R568	1-216-073-00	METAL GLAZE	10K	5%	1/10W	
R569	1-260-114-11	CARBON	18K	5%	1/2W	
R571	1-216-065-00	METAL GLAZE	4.7K	5%	1/10W	
R572	1-216-059-00	METAL GLAZE	2.7K	5%	1/10W	
R573	1-216-071-00	METAL GLAZE	8.2K	5%	1/10W	
R574	1-216-689-11	METAL GLAZE	39K	5%	1/10W	
R576	1-216-101-00	METAL GLAZE	150K	5%	1/10W	
R578	1-216-693-11	METAL CHIP	56K	0.50%	1/10W	
R580	1-216-105-00	METAL GLAZE	220K	5%	1/10W	
R582	1-216-085-00	METAL GLAZE	33K	5%	1/10W	
R583	1-216-039-00	METAL GLAZE	390	5%	1/10W	
R584	1-216-071-00	METAL GLAZE	8.2K	5%	1/10W	
R585	1-216-033-00	METAL GLAZE	220	5%	1/10W	
R586	1-216-686-11	METAL CHIP	30K	0.50%	1/10W	
R587	1-216-675-11	METAL CHIP	10K	0.50%	1/10W	
R588	1-216-077-00	METAL GLAZE	15K	5%	1/10W	
R589	1-216-067-00	METAL GLAZE	5.6K	5%	1/10W	
R590	1-216-081-00	METAL GLAZE	22K	5%	1/10W	
R591	1-216-683-11	METAL CHIP	22K	0.50%	1/10W	
R592	1-247-688-11	CARBON	10	5%	1/4W	F
R593	1-216-647-11	METAL CHIP	680	0.50%	1/10W	
R594	1-260-104-91	CARBON	2.7K	5%	1/2W	
R595	1-216-689-11	METAL GLAZE	39K	5%	1/10W	
R596	1-214-754-00	METAL	11K	1%	1/4W	
R597	1-249-417-11	CARBON	1K	5%	1/4W	F
R598	1-216-085-00	METAL GLAZE	33K	5%	1/10W	
R599	1-216-645-11	METAL CHIP	560	0.50%	1/10W	
R1102	1-216-295-00	METAL GLAZE	0	5%	1/10W	
R1103	1-216-077-00	METAL GLAZE	15K	5%	1/10W	
R1104	1-216-699-11	METAL CHIP	100K	0.50%	1/10W	
R1105	1-216-073-00	METAL GLAZE	10K	5%	1/10W	
R1106	1-216-097-00	METAL GLAZE	100K	5%	1/10W	
R1107	1-216-059-00	METAL GLAZE	2.7K	5%	1/10W	
R1108	1-216-681-11	METAL CHIP	18K	0.50%	1/10W	
R1109	1-216-295-00	METAL GLAZE	0	5%	1/10W	
R1110	1-216-295-00	METAL GLAZE	0	5%	1/10W	
R1113	1-216-081-00	METAL GLAZE	22K	5%	1/10W	
R1118	1-216-113-00	METAL GLAZE	470K	5%	1/10W	
R1123	1-216-071-00	METAL GLAZE	8.2K	5%	1/10W	
R1124	1-216-113-00	METAL GLAZE	470K	5%	1/10W	
R1125	1-216-049-00	METAL GLAZE	1K	5%	1/10W	
R1128	1-216-065-00	METAL GLAZE	4.7K	5%	1/10W	
R1129	1-216-071-00	METAL GLAZE	8.2K	5%	1/10W	
R1131	1-216-049-00	METAL GLAZE	1K	5%	1/10W	
R1132	1-216-071-00	METAL GLAZE	8.2K	5%	1/10W	
R1134	1-216-073-00	METAL GLAZE	10K	5%	1/10W	
R1135	1-216-295-00	METAL GLAZE	0	5%	1/10W	
R1136	1-216-097-00	METAL GLAZE	100K	5%	1/10W	
R1139	1-216-055-00	METAL GLAZE	1.8K	5%	1/10W	
R1140	1-216-653-11	METAL CHIP	1.2K	0.50%	1/10W	
R1141	1-216-083-00	METAL GLAZE	27K	5%	1/10W	
R1142	1-216-653-11	METAL CHIP	1.2K	0.50%	1/10W	
R1143	1-216-653-11	METAL CHIP	1.2K	0.50%	1/10W	
R1144	1-216-073-00	METAL GLAZE	10K	5%	1/10W	
R1145	1-216-067-00	METAL GLAZE	5.6K	5%	1/10W	
R1146	1-216-057-00	METAL GLAZE	2.2K	5%	1/10W	
R1147	1-216-057-00	METAL GLAZE	2.2K	5%	1/10W	
R1148	1-216-065-00	METAL GLAZE	4.7K	5%	1/10W	
R1150	1-216-037-00	METAL GLAZE	330	5%	1/10W	
R1151	1-216-081-00	METAL GLAZE	22K	5%	1/10W	
R1155	1-216-133-00	METAL GLAZE	3.3M	5%	1/10W	
R1163	1-216-033-00	METAL GLAZE	220	5%	1/10W	
R1164	1-216-049-00	METAL GLAZE	1K	5%	1/10W	
R1165	1-216-049-00	METAL GLAZE	1K	5%	1/10W	
R1166	1-216-295-00	METAL GLAZE	0	5%	1/10W	
R1171	1-216-085-00	METAL GLAZE	33K	5%	1/10W	
R1172	1-216-085-00	METAL GLAZE	33K	5%	1/10W	
R1176	1-216-295-00	METAL GLAZE	0	5%	1/10W	
R1177	1-216-071-00	METAL GLAZE	8.2K	5%	1/10W	
R1178	1-216-295-00	METAL GLAZE	0	5%	1/10W	
R1179	1-216-041-00	METAL GLAZE	470	5%	1/10W	
R1180	1-216-089-91	METAL GLAZE	47K	5%	1/10W	
R1181	1-216-295-00	METAL GLAZE	0	5%	1/10W	
R1182	1-216-131-11	METAL GLAZE	2.7M	5%	1/10W	
R1183	1-216-071-00	METAL GLAZE	8.2K	5%	1/10W	
R1184	1-216-131-11	METAL GLAZE	2.7M	5%	1/10W	

A (PVM-1350)

REF.NO.	PART NO.	DESCRIPTION				REMARK
R1185	1-216-071-00	METAL GLAZE	8.2K	5%	1/10W	
R1186	1-216-131-11	METAL GLAZE	2.7M	5%	1/10W	
R1187	1-216-071-00	METAL GLAZE	8.2K	5%	1/10W	
R1188	1-216-131-11	METAL GLAZE	2.7M	5%	1/10W	
R1189	1-216-071-00	METAL GLAZE	8.2K	5%	1/10W	
R1190	1-216-131-11	METAL GLAZE	2.7M	5%	1/10W	
R1191	1-216-071-00	METAL GLAZE	8.2K	5%	1/10W	
R1192	1-216-131-11	METAL GLAZE	2.7M	5%	1/10W	
R1193	1-216-025-00	METAL GLAZE	100	5%	1/10W	
R1194	1-216-085-00	METAL GLAZE	33K	5%	1/10W	
R1195	1-216-025-00	METAL GLAZE	100	5%	1/10W	
R1196	1-216-085-00	METAL GLAZE	33K	5%	1/10W	
R1197	1-216-025-00	METAL GLAZE	100	5%	1/10W	
R1198	1-216-085-00	METAL GLAZE	33K	5%	1/10W	
R1304	1-216-689-11	METAL GLAZE	39K	5%	1/10W	
R1305	1-216-033-00	METAL GLAZE	220	5%	1/10W	
R1306	1-216-645-11	METAL CHIP	560	0.50%	1/10W	
R1307	1-216-091-00	METAL GLAZE	56K	5%	1/10W	
R1308	1-216-645-11	METAL CHIP	560	0.50%	1/10W	
R1309	1-216-025-00	METAL GLAZE	100	5%	1/10W	
R1310	1-216-025-00	METAL GLAZE	100	5%	1/10W	
R1311	1-216-089-91	METAL GLAZE	47K	5%	1/10W	
R1312	1-216-027-00	METAL GLAZE	120	5%	1/10W	
R1313	1-216-097-00	METAL GLAZE	100K	5%	1/10W	
R1314	1-216-081-00	METAL GLAZE	22K	5%	1/10W	
R1316	1-216-065-00	METAL GLAZE	4.7K	5%	1/10W	
R1317	1-216-041-00	METAL GLAZE	470	5%	1/10W	
R1318	1-216-061-00	METAL GLAZE	3.3K	5%	1/10W	
R1319	1-216-085-00	METAL GLAZE	33K	5%	1/10W	
R1320	1-216-065-00	METAL GLAZE	4.7K	5%	1/10W	
R1323	1-216-097-00	METAL GLAZE	100K	5%	1/10W	
R1328	1-216-125-00	METAL GLAZE	1.5M	5%	1/10W	
R1329	1-216-103-91	METAL GLAZE	180K	5%	1/10W	
R1330	1-216-081-00	METAL GLAZE	22K	5%	1/10W	
R1331	1-216-679-11	METAL CHIP	15K	0.50%	1/10W	
R1332	1-216-671-11	METAL CHIP	6.8K	0.50%	1/10W	
R1333	1-216-049-00	METAL GLAZE	1K	5%	1/10W	
R1334	1-216-063-00	METAL GLAZE	3.9K	5%	1/10W	
R1335	1-249-401-11	CARBON	47	5%	1/4W	F
R1336	1-216-095-00	METAL GLAZE	82K	5%	1/10W	
R1337	1-216-061-00	METAL GLAZE	3.3K	5%	1/10W	
R1338	1-216-647-11	METAL CHIP	680	0.50%	1/10W	
R1339	1-216-033-00	METAL GLAZE	220	5%	1/10W	
R1340	1-216-033-00	METAL GLAZE	220	5%	1/10W	
R1341	1-216-033-00	METAL GLAZE	220	5%	1/10W	
R1342	1-216-083-00	METAL GLAZE	27K	5%	1/10W	
R1343	1-216-037-00	METAL GLAZE	330	5%	1/10W	
R1344	1-216-093-00	METAL GLAZE	68K	5%	1/10W	
R1345	1-216-109-00	METAL GLAZE	330K	5%	1/10W	
R1346	1-216-097-00	METAL GLAZE	100K	5%	1/10W	
R1347	1-216-073-00	METAL GLAZE	10K	5%	1/10W	
R1348	1-216-071-00	METAL GLAZE	8.2K	5%	1/10W	
R1349	1-216-035-00	METAL GLAZE	270	5%	1/10W	
R1350	1-216-073-00	METAL GLAZE	10K	5%	1/10W	
R1351	1-216-033-00	METAL GLAZE	220	5%	1/10W	
R1352	1-216-065-00	METAL GLAZE	4.7K	5%	1/10W	
R1353	1-216-065-00	METAL GLAZE	4.7K	5%	1/10W	
R1354	1-216-089-91	METAL GLAZE	47K	5%	1/10W	
R1355	1-216-033-00	METAL GLAZE	220	5%	1/10W	
R1356	1-216-105-00	METAL GLAZE	220K	5%	1/10W	
R1357	1-216-101-00	METAL GLAZE	150K	5%	1/10W	
R1359	1-216-099-00	METAL GLAZE	120K	5%	1/10W	
R1360	1-216-065-00	METAL GLAZE	4.7K	5%	1/10W	
R1361	1-216-113-00	METAL GLAZE	470K	5%	1/10W	
R1363	1-216-113-00	METAL GLAZE	470K	5%	1/10W	
R1365	1-216-131-11	METAL GLAZE	2.7M	5%	1/10W	
R1366	1-216-081-00	METAL GLAZE	22K	5%	1/10W	
R1367	1-216-057-00	METAL GLAZE	2.2K	5%	1/10W	
R1368	1-216-059-00	METAL GLAZE	2.7K	5%	1/10W	
R1369	1-216-051-00	METAL GLAZE	1.2K	5%	1/10W	
R1370	1-216-105-00	METAL GLAZE	220K	5%	1/10W	
R1371	1-216-113-00	METAL GLAZE	470K	5%	1/10W	
R1372	1-249-437-11	CARBON	47K	5%	1/4W	
R1373	1-216-063-00	METAL GLAZE	3.9K	5%	1/10W	
R1374	1-216-101-00	METAL GLAZE	150K	5%	1/10W	
R1375	1-216-645-11	METAL CHIP	560	0.50%	1/10W	
R1376	1-216-647-11	METAL CHIP	680	0.50%	1/10W	
R1377	1-216-055-00	METAL GLAZE	1.8K	5%	1/10W	
R1378	1-216-065-00	METAL GLAZE	4.7K	5%	1/10W	
R1379	1-216-037-00	METAL GLAZE	330	5%	1/10W	
R1380	1-216-645-11	METAL CHIP	560	0.50%	1/10W	
R1381	1-216-647-11	METAL CHIP	680	0.50%	1/10W	
R1383	1-216-681-11	METAL CHIP	18K	0.50%	1/10W	
R1384	1-216-091-00	METAL GLAZE	56K	5%	1/10W	
R1385	1-216-073-00	METAL GLAZE	10K	5%	1/10W	
R1386	1-216-077-00	METAL GLAZE	15K	5%	1/10W	
R1387	1-216-653-11	METAL CHIP	1.2K	0.50%	1/10W	
R1388	1-216-689-11	METAL CHIP	39K	0.50%	1/10W	
R1389	1-216-657-11	METAL CHIP	1.8K	0.50%	1/10W	
R1390	1-216-647-11	METAL CHIP	680	0.50%	1/10W	
R1391	1-216-025-00	METAL GLAZE	100	5%	1/10W	
R1392	1-216-041-00	METAL GLAZE	470	5%	1/10W	
R1393	1-216-063-00	METAL GLAZE	3.9K	5%	1/10W	
R1394	1-216-041-00	METAL GLAZE	470	5%	1/10W	
R1395	1-216-071-00	METAL GLAZE	8.2K	5%	1/10W	
R1396	1-216-071-00	METAL GLAZE	8.2K	5%	1/10W	
R1397	1-216-065-00	METAL GLAZE	4.7K	5%	1/10W	
R1398	1-216-295-00	METAL GLAZE	0	5%	1/10W	
R1399	1-216-073-00	METAL GLAZE	10K	5%	1/10W	
R1401	1-216-085-00	METAL GLAZE	33K	5%	1/10W	
R1402	1-216-295-00	METAL GLAZE	0	5%	1/10W	
R1403	1-216-651-11	METAL CHIP	1K	0.50%	1/10W	
R1404	1-216-681-11	METAL CHIP	18K	0.50%	1/10W	
R1405	1-216-071-00	METAL GLAZE	8.2K	5%	1/10W	
R1406	1-216-653-11	METAL CHIP	1.2K	0.50%	1/10W	
R1407	1-216-061-00	METAL GLAZE	3.3K	5%	1/10W	
R1408	1-216-113-00	METAL GLAZE	470K	5%	1/10W	
R1409	1-216-295-00	METAL GLAZE	0	5%	1/10W	
R1410	1-216-053-00	METAL GLAZE	1.5K	5%	1/10W	
R1413	1-216-081-00	METAL GLAZE	22K	5%	1/10W	
R1414	1-216-057-00	METAL GLAZE	2.2K	5%	1/10W	
R1415	1-216-093-00	METAL GLAZE	68K	5%	1/10W	
R1416	1-216-113-00	METAL GLAZE	470K	5%	1/10W	
R1417	1-216-033-00	METAL GLAZE	220	5%	1/10W	
R1418	1-216-033-00	METAL GLAZE	220	5%	1/10W	
R1419	1-216-025-00	METAL GLAZE	100	5%	1/10W	
R1420	1-216-089-91	METAL GLAZE	47K	5%	1/10W	
R1421	1-216-649-11	METAL CHIP	820	0.50%	1/10W	
R1422	1-216-085-00	METAL GLAZE	33K	5%	1/10W	
R1423	1-216-057-00	METAL GLAZE	2.2K	5%	1/10W	
R1424	1-216-081-00	METAL GLAZE	22K	5%	1/10W	
R1425	1-216-013-00	METAL GLAZE	33	5%	1/10W	
R1426	1-216-113-00	METAL GLAZE	470K	5%	1/10W	
R1427	1-216-681-11	METAL CHIP	18K	0.50%	1/10W	
R1428	1-216-061-00	METAL GLAZE	3.3K	5%	1/10W	
R1429	1-216-668-11	METAL CHIP	5.1K	0.50%	1/10W	
R1430	1-216-073-00	METAL GLAZE	10K	5%	1/10W	

The components identified by shading and mark ⚠ are critical for safety.
Replace only with part number specified.

Les composants identifies par une trame et une marque ⚠ sont critiques pour la securite.
Ne les remplacer que par une piece portant le numero specifie.

A (PVM-1350)

REF.NO.	PART NO.	DESCRIPTION				REMARK
R1431	1-216-129-00	METAL GLAZE	2.2M	5%	1/10W	
R1432	1-216-089-91	METAL GLAZE	47K	5%	1/10W	
R1434	1-216-295-00	METAL GLAZE	0	5%	1/10W	
R1436	1-216-073-00	METAL GLAZE	10K	5%	1/10W	
R1437	1-216-069-00	METAL GLAZE	6.8K	5%	1/10W	
R1438	1-216-073-00	METAL GLAZE	10K	5%	1/10W	
R1439	1-216-059-00	METAL GLAZE	2.7K	5%	1/10W	
R1440	1-216-041-00	METAL GLAZE	470	5%	1/10W	
R1441	1-216-033-00	METAL GLAZE	220	5%	1/10W	
R1442	1-216-073-00	METAL GLAZE	10K	5%	1/10W	
R1443	1-216-013-00	METAL GLAZE	33	5%	1/10W	
R1444	1-216-057-00	METAL GLAZE	2.2K	5%	1/10W	
R1445	1-216-071-00	METAL GLAZE	8.2K	5%	1/10W	
R1446	1-216-071-00	METAL GLAZE	8.2K	5%	1/10W	
R1447	1-216-081-00	METAL GLAZE	22K	5%	1/10W	
R1448	1-216-085-00	METAL GLAZE	33K	5%	1/10W	
R1449	1-216-057-00	METAL GLAZE	2.2K	5%	1/10W	
R1450	1-216-129-00	METAL GLAZE	2.2M	5%	1/10W	
R1451	1-216-093-00	METAL GLAZE	68K	5%	1/10W	
R1452	1-216-085-00	METAL GLAZE	33K	5%	1/10W	
R1453	1-216-013-00	METAL GLAZE	33	5%	1/10W	
R1454	1-216-065-00	METAL GLAZE	4.7K	5%	1/10W	
R1455	1-216-113-00	METAL GLAZE	470K	5%	1/10W	
R1456	1-216-129-00	METAL GLAZE	2.2M	5%	1/10W	
R1457	1-216-089-91	METAL GLAZE	47K	5%	1/10W	
R1458	1-216-085-00	METAL GLAZE	33K	5%	1/10W	
R1459	1-216-133-00	METAL GLAZE	3.3M	5%	1/10W	
R1460	1-216-097-00	METAL GLAZE	100K	5%	1/10W	
R1461	1-216-645-11	METAL CHIP	560	0.50%	1/10W	
R1462	1-216-645-11	METAL CHIP	560	0.50%	1/10W	
R1463	1-216-645-11	METAL CHIP	560	0.50%	1/10W	
R1464	1-216-057-00	METAL GLAZE	2.2K	5%	1/10W	
R1465	1-216-097-00	METAL GLAZE	100K	5%	1/10W	
R1466	1-216-055-00	METAL GLAZE	1.8K	5%	1/10W	
R1467	1-216-073-00	METAL GLAZE	10K	5%	1/10W	
R1468	1-249-438-11	CARBON	56K	5%	1/4W	
R1469	1-216-057-00	METAL GLAZE	2.2K	5%	1/10W	
R1470	1-216-057-00	METAL GLAZE	2.2K	5%	1/10W	
R1471	1-216-049-00	METAL GLAZE	1K	5%	1/10W	
R1472	1-216-085-00	METAL GLAZE	33K	5%	1/10W	
R1473	1-216-081-00	METAL GLAZE	22K	5%	1/10W	
R1474	1-216-687-11	METAL CHIP	33K	0.50%	1/10W	
R1475	1-216-677-11	METAL CHIP	12K	0.50%	1/10W	
R1476	1-216-063-00	METAL GLAZE	3.9K	5%	1/10W	
R1477	1-216-057-00	METAL GLAZE	2.2K	5%	1/10W	
R1478	1-216-061-00	METAL GLAZE	3.3K	5%	1/10W	
R1479	1-216-295-00	METAL GLAZE	0	5%	1/10W	
R1480	1-216-089-91	METAL GLAZE	47K	5%	1/10W	
R1481	1-216-115-00	METAL GLAZE	560K	5%	1/10W	
R1482	1-216-089-91	METAL GLAZE	47K	5%	1/10W	
R1483	1-216-089-91	METAL GLAZE	47K	5%	1/10W	
R1484	1-216-081-00	METAL GLAZE	22K	5%	1/10W	
R1485	1-216-113-00	METAL GLAZE	470K	5%	1/10W	
R1486	1-216-121-00	METAL GLAZE	1M	5%	1/10W	
R1487	1-216-113-00	METAL GLAZE	470K	5%	1/10W	
R1488	1-216-083-00	METAL GLAZE	27K	5%	1/10W	
R1489	1-216-069-00	METAL GLAZE	6.8K	5%	1/10W	
R1490	1-216-035-00	METAL GLAZE	270	5%	1/10W	
R1491	1-216-035-00	METAL GLAZE	270	5%	1/10W	
R1492	1-216-035-00	METAL GLAZE	270	5%	1/10W	
R1493	1-216-083-00	METAL GLAZE	27K	5%	1/10W	
R1494	1-216-081-00	METAL GLAZE	22K	5%	1/10W	
R1495	1-216-089-91	METAL GLAZE	47K	5%	1/10W	
R1497	1-216-113-00	METAL GLAZE	470K	5%	1/10W	

- The components identified by ☒ in this manual have been carefully factory-selected for each set in order to satisfy regulations regarding X-ray radiation. Should replacement be required, replace only with the value originally used.

REF.NO.	PART NO.	DESCRIPTION				REMARK
R1498	1-216-057-00	METAL GLAZE	2.2K	5%	1/10W	
R1499	1-216-057-00	METAL GLAZE	2.2K	5%	1/10W	
R1500	1-216-647-11	METAL CHIP	680	0.50%	1/10W	
R1501	1-216-071-00	METAL GLAZE	8.2K	5%	1/10W	
R1502	1-260-105-11	CARBON	3.3K	5%	1/2W	
R1503	1-216-063-00	METAL GLAZE	3.9K	5%	1/10W	
R1504	1-216-686-11	METAL CHIP	30K	0.50%	1/10W	
R1505	1-247-688-11	CARBON	10	5%	1/4W	F
R1506	1-216-037-00	METAL GLAZE	330	5%	1/10W	
R1507	1-216-065-00	METAL GLAZE	4.7K	5%	1/10W	
R1508	1-216-689-11	METAL GLAZE	39K	5%	1/10W	
R1510	1-216-077-00	METAL GLAZE	15K	5%	1/10W	
R1511	1-216-360-11	METAL OXIDE	8.2	5%	1W	F
R1512	1-216-647-11	METAL CHIP	680	0.50%	1/10W	
R1513	1-247-752-11	CARBON	1K	5%	1/2W	F
R1514	1-247-711-11	CARBON	680	5%	1/4W	F
R1515	1-216-350-11	METAL OXIDE	1.2	5%	1W	F
R1518	1-215-867-00	METAL OXIDE	470	5%	1W	F
R1519	1-216-355-11	METAL OXIDE	3.3	5%	1W	F
R1520	1-216-007-00	METAL GLAZE	18	5%	1/10W	
R1521	1-216-029-00	METAL GLAZE	150	5%	1/10W	
R1522	1-249-400-11	CARBON	39	5%	1/4W	F
R1523	1-216-350-11	METAL OXIDE	1.2	5%	1W	F
R1524	1-216-427-00	METAL OXIDE	120	5%	1W	F
R1525	1-216-083-00	METAL GLAZE	27K	5%	1/10W	
R1526	1-216-089-91	METAL GLAZE	47K	5%	1/10W	
R1527	1-249-413-11	CARBON	470	5%	1/4W	F
R1528	1-215-869-11	METAL OXIDE	1K	5%	1W	F
R1529	1-202-829-11	SOLID	8.2K	20%	1/2W	
R1530	1-216-115-00	METAL GLAZE	560K	5%	1/10W	
R1531	1-247-697-11	CARBON	56	5%	1/4W	F
R1532	1-216-059-00	METAL GLAZE	2.7K	5%	1/10W	
R1533	1-249-414-11	CARBON	560	5%	1/4W	F
☒R1535⚠						
☒R1536⚠						
R1537	1-249-389-11	CARBON	4.7	5%	1/4W	F
R1538	1-216-073-00	METAL GLAZE	10K	5%	1/10W	
R1539	1-216-689-11	METAL GLAZE	39K	5%	1/10W	
R1540	1-216-105-00	METAL GLAZE	220K	5%	1/10W	
R1541	1-216-081-00	METAL GLAZE	22K	5%	1/10W	
R1542	1-216-111-00	METAL GLAZE	390K	5%	1/10W	
R1543	1-216-027-00	METAL GLAZE	120	5%	1/10W	
R1544	1-216-117-00	METAL GLAZE	680K	5%	1/10W	
R1545	1-216-101-00	METAL GLAZE	150K	5%	1/10W	
R1547	1-216-393-00	METAL OXIDE	2.2	5%	3W	F
R1549	1-260-094-11	CARBON	390	5%	1/2W	
R1550	1-216-105-00	METAL GLAZE	220K	5%	1/10W	
R1551	1-249-393-11	CARBON	10	5%	1/4W	F
R1552	1-216-049-00	METAL GLAZE	1K	5%	1/10W	
R1554	1-216-059-00	METAL GLAZE	2.7K	5%	1/10W	
R1555	1-216-295-00	METAL GLAZE	0	5%	1/10W	
R1556	1-216-071-00	METAL GLAZE	8.2K	5%	1/10W	
R1557	1-218-760-11	METAL CHIP	220K	0.50%	1/10W	
R1558	1-249-393-11	CARBON	10	5%	1/4W	F
R1559	1-249-393-11	CARBON	10	5%	1/4W	F
R1560	1-216-049-00	METAL GLAZE	1K	5%	1/10W	
R1561	1-216-681-11	METAL CHIP	18K	0.50%	1/10W	
R1562	1-214-964-00	METAL	1M	1%	1/4W	
R1563	1-214-964-00	METAL	1M	1%	1/4W	
R1564	1-216-681-11	METAL CHIP	18K	0.50%	1/10W	
R1567	1-216-089-91	METAL GLAZE	47K	5%	1/10W	
R1574	1-216-041-00	METAL GLAZE	470	5%	1/10W	
R1575	1-216-025-00	METAL GLAZE	100	5%	1/10W	
R1576	1-216-025-00	METAL GLAZE	100	5%	1/10W	
R1577	1-216-025-00	METAL GLAZE	100	5%	1/10W	

A (PVM-1350)

REF.NO.	PART NO.	DESCRIPTION				REMARK
R1578	1-216-065-00	METAL GLAZE	4.7K	5%	1/10W	
R1579	1-216-689-11	METAL GLAZE	39K	5%	1/10W	
R2300	1-216-065-00	METAL GLAZE	4.7K	5%	1/10W	
R2301	1-216-065-00	METAL GLAZE	4.7K	5%	1/10W	
R2306	1-216-089-91	METAL GLAZE	47K	5%	1/10W	
R2307	1-216-033-00	METAL GLAZE	220	5%	1/10W	
R2308	1-216-103-91	METAL GLAZE	180K	5%	1/10W	
R2309	1-216-049-00	METAL GLAZE	1K	5%	1/10W	
R2311	1-216-073-00	METAL GLAZE	10K	5%	1/10W	
R2312	1-216-053-00	METAL GLAZE	1.5K	5%	1/10W	
R2315	1-216-679-11	METAL CHIP	15K	0.50%	1/10W	
R2316	1-216-081-00	METAL GLAZE	22K	5%	1/10W	
R2317	1-216-049-00	METAL GLAZE	1K	5%	1/10W	
R2320	1-216-677-11	METAL CHIP	12K	0.50%	1/10W	
R2323	1-216-683-11	METAL CHIP	22K	0.50%	1/10W	
R2325	1-216-063-00	METAL GLAZE	3.9K	5%	1/10W	
R2326	1-216-041-00	METAL GLAZE	470	5%	1/10W	
R2327	1-216-059-00	METAL GLAZE	2.7K	5%	1/10W	
R2328	1-216-049-00	METAL GLAZE	1K	5%	1/10W	
R2329	1-216-059-00	METAL GLAZE	2.7K	5%	1/10W	
R2330	1-216-049-00	METAL GLAZE	1K	5%	1/10W	
R2331	1-216-059-00	METAL GLAZE	2.7K	5%	1/10W	
R2332	1-216-049-00	METAL GLAZE	1K	5%	1/10W	
R2334	1-216-041-00	METAL GLAZE	470	5%	1/10W	
R2335	1-216-061-00	METAL GLAZE	3.3K	5%	1/10W	
R2336	1-216-065-00	METAL GLAZE	4.7K	5%	1/10W	
R2337	1-216-037-00	METAL GLAZE	330	5%	1/10W	
R2338	1-216-073-00	METAL GLAZE	10K	5%	1/10W	
R2339	1-216-037-00	METAL GLAZE	330	5%	1/10W	
R2341	1-216-037-00	METAL GLAZE	330	5%	1/10W	
R2342	1-216-071-00	METAL GLAZE	8.2K	5%	1/10W	
R2344	1-216-121-00	METAL GLAZE	1M	5%	1/10W	
R2346	1-216-061-00	METAL GLAZE	3.3K	5%	1/10W	
R2347	1-216-061-00	METAL GLAZE	3.3K	5%	1/10W	
R2348	1-216-061-00	METAL GLAZE	3.3K	5%	1/10W	
R2349	1-216-679-11	METAL CHIP	15K	0.50%	1/10W	
R2350	1-216-061-00	METAL GLAZE	3.3K	5%	1/10W	
R2351	1-216-061-00	METAL GLAZE	3.3K	5%	1/10W	
R2352	1-216-061-00	METAL GLAZE	3.3K	5%	1/10W	
R2353	1-216-041-00	METAL GLAZE	470	5%	1/10W	
R2354	1-216-025-00	METAL GLAZE	100	5%	1/10W	
R2354	1-216-681-11	METAL CHIP	18K	0.50%	1/10W	
R2356	1-216-089-91	METAL GLAZE	47K	5%	1/10W	
R2357	1-216-095-00	METAL GLAZE	82K	5%	1/10W	
R2358	1-216-025-00	METAL GLAZE	100	5%	1/10W	
R2359	1-216-097-00	METAL GLAZE	100K	5%	1/10W	
R2360	1-216-689-11	METAL GLAZE	39K	5%	1/10W	
R2362	1-216-081-00	METAL GLAZE	22K	5%	1/10W	
R2364	1-216-025-00	METAL GLAZE	100	5%	1/10W	
R2366	1-216-067-00	METAL GLAZE	5.6K	5%	1/10W	
R2367	1-216-093-00	METAL GLAZE	68K	5%	1/10W	
R2369	1-216-083-00	METAL GLAZE	27K	5%	1/10W	
R2370	1-216-081-00	METAL GLAZE	22K	5%	1/10W	
R2371	1-216-049-00	METAL GLAZE	1K	5%	1/10W	
R2372	1-216-113-00	METAL GLAZE	470K	5%	1/10W	
R2374	1-216-097-00	METAL GLAZE	100K	5%	1/10W	
R2375	1-216-089-91	METAL GLAZE	47K	5%	1/10W	
R2376	1-216-089-91	METAL GLAZE	47K	5%	1/10W	
R2377	1-216-033-00	METAL GLAZE	220	5%	1/10W	
R2378	1-216-089-91	METAL GLAZE	47K	5%	1/10W	
R2379	1-216-033-00	METAL GLAZE	220	5%	1/10W	
R2380	1-216-089-91	METAL GLAZE	47K	5%	1/10W	
R2381	1-216-089-91	METAL GLAZE	47K	5%	1/10W	
R2382	1-216-089-91	METAL GLAZE	47K	5%	1/10W	
R2383	1-216-033-00	METAL GLAZE	220	5%	1/10W	
R2384	1-216-689-11	METAL GLAZE	39K	5%	1/10W	
R2389	1-216-033-00	METAL GLAZE	220	5%	1/10W	
R2390	1-216-647-11	METAL CHIP	680	0.50%	1/10W	
R2391	1-216-647-11	METAL CHIP	680	0.50%	1/10W	
R2394	1-216-081-00	METAL GLAZE	22K	5%	1/10W	
R2396	1-216-041-00	METAL GLAZE	470	5%	1/10W	
R2397	1-216-113-00	METAL GLAZE	470K	5%	1/10W	
R2398	1-216-109-00	METAL GLAZE	330K	5%	1/10W	
R2399	1-216-073-00	METAL GLAZE	10K	5%	1/10W	
R2501	1-216-083-00	METAL GLAZE	27K	5%	1/10W	
R2502	1-216-077-00	METAL GLAZE	15K	5%	1/10W	
R2551	1-216-091-00	METAL GLAZE	56K	5%	1/10W	
R2552	1-216-085-00	METAL GLAZE	33K	5%	1/10W	
R2553	1-216-083-00	METAL GLAZE	27K	5%	1/10W	
R2555	1-216-055-00	METAL GLAZE	1.8K	5%	1/10W	
R2556	1-216-051-00	METAL GLAZE	1.2K	5%	1/10W	
R2557	1-216-067-00	METAL GLAZE	5.6K	5%	1/10W	
R2558	1-216-057-00	METAL GLAZE	2.2K	5%	1/10W	
R2559	1-216-039-00	METAL GLAZE	390	5%	1/10W	
R2560	1-216-069-00	METAL GLAZE	6.8K	5%	1/10W	
R2561	1-216-001-00	METAL GLAZE	10	5%	1/10W	
R2562	1-216-001-00	METAL GLAZE	10	5%	1/10W	
R2563	1-216-057-00	METAL GLAZE	2.2K	5%	1/10W	
R3301	1-216-073-00	METAL GLAZE	10K	5%	1/10W	
R3302	1-216-065-00	METAL GLAZE	4.7K	5%	1/10W	
R3303	1-216-065-00	METAL GLAZE	4.7K	5%	1/10W	
R3304	1-216-065-00	METAL GLAZE	4.7K	5%	1/10W	
R3308	1-216-097-00	METAL GLAZE	100K	5%	1/10W	
R3310	1-216-049-00	METAL GLAZE	1K	5%	1/10W	
R3311	1-216-091-00	METAL GLAZE	56K	5%	1/10W	
R3312	1-216-105-00	METAL GLAZE	220K	5%	1/10W	
R3314	1-216-295-00	METAL GLAZE	0	5%	1/10W	
R3315	1-216-065-00	METAL GLAZE	4.7K	5%	1/10W	
R3316	1-216-065-00	METAL GLAZE	4.7K	5%	1/10W	
R3317	1-216-103-91	METAL GLAZE	180K	5%	1/10W	
R3318	1-216-065-00	METAL GLAZE	4.7K	5%	1/10W	
R3319	1-216-027-00	METAL GLAZE	120	5%	1/10W	
R3321	1-216-677-11	METAL CHIP	12K	0.50%	1/10W	
R3322	1-216-073-00	METAL GLAZE	10K	5%	1/10W	
R3333	1-216-113-00	METAL GLAZE	470K	5%	1/10W	
R3337	1-216-099-00	METAL GLAZE	120K	5%	1/10W	
R3338	1-218-759-11	METAL CHIP	200K	0.50%	1/10W	
R3341	1-216-083-00	METAL GLAZE	27K	5%	1/10W	
R3346	1-216-025-00	METAL GLAZE	100	5%	1/10W	
R3347	1-216-025-00	METAL GLAZE	100	5%	1/10W	
R3348	1-216-025-00	METAL GLAZE	100	5%	1/10W	
R3349	1-216-025-00	METAL GLAZE	100	5%	1/10W	
R3350	1-216-113-00	METAL GLAZE	470K	5%	1/10W	
R3351	1-216-119-00	METAL GLAZE	820K	5%	1/10W	
R3365	1-216-081-00	METAL GLAZE	22K	5%	1/10W	
R3376	1-216-081-00	METAL GLAZE	22K	5%	1/10W	
R3377	1-216-107-00	METAL GLAZE	270K	5%	1/10W	
R3378	1-216-115-00	METAL GLAZE	560K	5%	1/10W	
R3390	1-216-057-00	METAL GLAZE	2.2K	5%	1/10W	
R3394	1-216-089-91	METAL GLAZE	47K	5%	1/10W	
R3395	1-249-417-11	CARBON	1K	5%	1/4W	
R3396	1-216-041-00	METAL GLAZE	470	5%	1/10W	
R3397	1-216-041-00	METAL GLAZE	470	5%	1/10W	
R3398	1-216-101-00	METAL GLAZE	150K	5%	1/10W	
R4401	1-216-085-00	METAL GLAZE	33K	5%	1/10W	
R4402	1-216-113-00	METAL GLAZE	470K	5%	1/10W	
R4404	1-216-073-00	METAL GLAZE	10K	5%	1/10W	

The components identified by shading and mark ⚠ are critical for safety.
Replace only with part number specified.

Les composants identifies par une trame et une marque ⚠ sont critiques pour la securite.
Ne les remplacer que par une piece portant le numero specifie.

A (PVM-1350) G

REF.NO.	PART NO.	DESCRIPTION				REMARK
R4405	1-216-067-00	METAL GLAZE	5.6K	5%	1/10W	
R4407	1-216-061-00	METAL GLAZE	3.3K	5%	1/10W	
R4408	1-216-059-00	METAL GLAZE	2.7K	5%	1/10W	
R4409	1-216-059-00	METAL GLAZE	2.7K	5%	1/10W	
R4410	1-216-059-00	METAL GLAZE	2.7K	5%	1/10W	
R4411	1-216-113-00	METAL GLAZE	470K	5%	1/10W	
R4412	1-216-113-00	METAL GLAZE	470K	5%	1/10W	
R4413	1-216-295-00	METAL GLAZE	0	5%	1/10W	
R4415	1-216-295-00	METAL GLAZE	0	5%	1/10W	
R4416	1-216-295-00	METAL GLAZE	0	5%	1/10W	

<VARIABLE RESISTOR>

RV501	1-223-102-00	RES, ADJ, WIREWOUND 120

<TRANSFORMER>

T500	1-426-668-11	TRANSFORMER, FERRITE (HDT)
T501 ⚠	1-453-163-11	TRANSFORMER ASSY, FLYBACK

<THERMISTOR>

TH500	1-807-970-11	THERMISTOR

<CRYSTAL>

X101	1-579-175-11	VIBRATOR, CERAMIC
X301	1-527-722-00	OSCILLATOR, CRYSTAL

****

*A-1316-174-A	G BOARD, COMPLETE	
	**********	
1-533-189-11	HOLDER, FUSE	
4-363-414-00	SPACER, MICA	
4-382-854-11	SCREW (M3X10), P, SW (+)	

<CAPACITOR>

REF.NO.	PART NO.	DESCRIPTION			REMARK
C601 ⚠	1-161-953-71	CERAMIC	0.0047MF	20%	400V
C602 ⚠	1-161-953-71	CERAMIC	0.0047MF	20%	400V
C603 ⚠	1-161-953-71	CERAMIC	0.0047MF	20%	400V
C604 ⚠	1-161-953-71	CERAMIC	0.0047MF	20%	400V
C605 ⚠	1-104-706-51	FILM	0.22MF	20%	250V
C606	1-124-907-11	ELECT	10MF	20%	50V
C607	1-124-798-11	ELECT	1MF	20%	160V
C608	1-129-765-00	FILM	0.047MF	10%	200V
C609	1-124-126-00	ELECT	47MF	20%	10V
C610	1-124-902-00	ELECT	0.47MF	20%	50V
C611	1-130-729-00	FILM	0.0027MF	5%	50V
C612	1-107-722-11	ELECT	470MF	20%	400V
C613 ⚠	1-104-706-51	FILM	0.22MF	20%	250V
C614	1-102-978-00	CERAMIC	220PF	5%	50V
C615 ⚠	1-104-706-51	FILM	0.22MF	20%	250V
C616	1-162-318-11	CERAMIC	0.001MF	10%	500V
C618	1-124-907-11	ELECT	10MF	20%	50V
C619	1-162-116-00	CERAMIC	680PF	10%	2KV
C620	1-162-116-00	CERAMIC	680PF	10%	2KV
C621	1-136-153-00	FILM	0.01MF	5%	50V
C622	1-126-773-21	ELECT	47MF	20%	250V
C623	1-162-318-11	CERAMIC	0.001MF	10%	500V
C624	1-124-477-11	ELECT	47MF	20%	16V
C625	1-161-973-00	CERAMIC	220PF	10%	400V
C627	1-136-066-00	FILM	0.003MF	3%	2KV
C628	1-136-067-00	FILM	0.0036MF	3%	2KV
C629	1-124-887-00	CERAMIC	0.001MF	10%	3KV
C630	1-102-973-00	CERAMIC	100PF	5%	50V
C631	1-161-973-00	CERAMIC	220PF	10%	400V
C632	1-162-599-12	CERAMIC	0.0047MF	20%	400V
C633	1-162-599-12	CERAMIC	0.0047MF	20%	400V
C634	1-102-125-00	CERAMIC	0.0047MF	10%	50V
C635	1-124-903-11	ELECT	1MF	20%	50V
C636	1-126-801-11	ELECT	1MF	20%	50V
C637	1-102-030-00	CERAMIC	330PF	10%	500V
C638	1-102-030-00	CERAMIC	330PF	10%	500V
C639	1-104-783-51	ELECT	1000MF	20%	25V
C640	1-128-386-11	ELECT	1000MF	20%	25V
C641	1-106-343-00	MYLAR	0.001MF	10%	100V
C642	1-102-030-00	CERAMIC	330PF	10%	500V
C643	1-104-884-11	ELECT	470MF	20%	50V
C644	1-102-030-00	CERAMIC	330PF	10%	500V
C645	1-162-131-11	CERAMIC	220PF	10%	2KV
C646	1-102-973-00	CERAMIC	100PF	5%	50V
C647	1-126-385-11	ELECT	390MF	20%	16V
C648	1-125-494-11	ELECT(BLOCK)	560MF	20%	160V
C649	1-126-803-11	ELECT	47MF	20%	16V
C650	1-126-103-11	ELECT	470MF	20%	16V
C651	1-126-101-11	ELECT	100MF	20%	16V
C652	1-124-667-11	ELECT	10MF	20%	50V
C653	1-136-169-00	FILM	0.22MF	5%	50V
C654 ⚠	1-161-953-71	CERAMIC	0.0047MF	20%	400V
C655 ⚠	1-161-953-71	CERAMIC	0.0047MF	20%	400V
C656 ⚠	1-161-953-71	CERAMIC	0.0047MF	20%	400V
C657	1-102-965-00	CERAMIC	39PF		50V
C658 ⚠	1-161-953-71	CERAMIC	0.0047MF	20%	400V
C659	1-102-123-00	CERAMIC	0.0033MF	10%	50V
C660	1-124-791-11	ELECT	1MF	20%	100V
C661	1-130-467-00	MYLAR	470PF	5%	50V

<CONNECTOR>

CN601	1-691-960-11	PIN, CONNECTOR (PC BOARD) 3P
CN602	*1-695-561-11	PIN, CONNECTOR (PC BOARD) 7P
CN603	1-508-765-00	PIN, CONNECTOR (5MM PITCH) 3P
CN605	*1-573-964-11	PIN, CONNECTOR (PC BOARD) 6P
CN606	*1-564-508-11	PLUG, CONNECTOR 5P
CN609	*1-506-371-00	PIN, CONNECTOR 2P

<DIODE>

D601 ⚠	8-719-510-53	DIODE D4SB60L
D602	8-719-300-33	DIODE RU-3AM
D603	8-719-110-90	DIODE RD39ESB4
D604	8-719-110-90	DIODE RD39ESB4
D605	8-719-109-97	DIODE RD6.8ESB2
D606	8-719-118-34	DIODE RD110EB
D607	8-719-110-41	DIODE RD15ESB2
D608	8-719-300-33	DIODE RU-3AM
D610	8-719-200-02	DIODE 10E-2
D611	8-719-300-33	DIODE RU-3AM
D615	8-719-300-33	DIODE RU-3AM
D616	8-719-911-19	DIODE 1SS119
D617	8-719-911-19	DIODE 1SS119
D618	8-719-908-03	DIODE GP08D
D619	8-719-110-41	DIODE RD15ESB2
D620	8-719-045-48	DIODE FML-G12S
D621	8-719-911-19	DIODE 1SS119
D622	8-719-979-58	DIODE EGP10D
D623	8-719-045-48	DIODE FML-G12S

G

• ✱ : Selected to yield optimum performance.

Les composants identifies par une trame et une marque ⚠ sont critiques pour la securite. Ne les remplacer que par une piece portant le numero specifie.

The components identified by shading and mark ⚠ are critical for safety. Replace only with part number specified.

REF.NO.	PART NO.	DESCRIPTION				REMARK
D625	8-719-016-42	DIODE MC932				
D626	8-719-109-71	DIODE RD3.9ESB1				
D628	8-719-979-50	DIODE EGP30D				
D629	8-719-979-85	DIODE EGP20G				
D630	8-719-911-19	DIODE 1SS119				
D631	8-719-911-19	DIODE 1SS119				
		<FERRITE BEAD>				
FB601⚠	1-543-190-11	BEAD, FERRITE				
FB602⚠	1-543-190-11	BEAD, FERRITE				
FB603	1-410-396-41	FERRITE BEAD INDUCTOR 0.45UH				
FB604⚠	1-543-190-11	BEAD, FERRITE				
FB605⚠	1-543-190-11	BEAD, FERRITE				
		<IC>				
IC601	8-759-100-75	IC UPC1394C				
IC602	8-759-255-41	IC MM1108XS				
IC603	8-759-927-49	IC IR9431				
IC604	8-759-924-12	IC LM7805CT				
		<COIL>				
L603	1-410-645-31	INDUCTOR	100UH			
L604	1-407-365-00	COIL, CHOKE				
L605	1-410-645-31	INDUCTOR	100UH			
		<PHOTO COUPLER>				
PH602	8-749-923-50	PHOTO COUPLER PC111YS				
PH606	8-749-923-50	PHOTO COUPLER PC111YS				
		<TRANSISTOR>				
Q601	8-729-119-78	TRANSISTOR 2SC2785-HFE				
Q602	8-729-119-80	TRANSISTOR 2SC2688-LK				
Q603	8-729-119-80	TRANSISTOR 2SC2688-LK				
Q605	8-729-119-80	TRANSISTOR 2SC2688-LK				
Q606	8-729-802-14	TRANSISTOR 2SC3460				
Q607	8-729-140-96	TRANSISTOR 2SD774-34				
Q609	8-729-905-67	TRANSISTOR 2SD1944-K				
Q610	8-729-209-03	TRANSISTOR 2SC2551-RO				
Q611	8-729-200-17	TRANSISTOR 2SA1091-O				
		<RESISTOR>				
R601 ⚠	1-260-123-91	CARBON	100K	5%	1/2W	
R602 ⚠	1-260-123-91	CARBON	100K	5%	1/2W	
R603	1-249-427-11	CARBON	6.8K	5%	1/4W	
R604 ⚠	1-214-937-55	METAL	1M	1%	1/2W	
R605	1-249-434-11	CARBON	27K	5%	1/4W	
R606	1-260-111-11	CARBON	10K	5%	1/2W	
R607	1-205-943-11	WIREWOUND	1	5%	20W	
R608	1-260-127-11	CARBON	220K	5%	1/2W	
R609	1-215-922-11	METAL OXIDE	6.8K	5%	3W	F
R610	1-215-922-11	METAL OXIDE	6.8K	5%	3W	F
R611	1-215-457-00	METAL	33K	1%	1/4W	
R612	1-202-719-00	SOLID	1M	20%	1/2W	
R613	1-202-720-00	SOLID	1.2M	20%	1/2W	
R614	1-249-423-11	CARBON	3.3K	5%	1/4W	
R615	1-260-322-11	CARBON	330	5%	1/2W	
R616	1-247-710-11	CARBON	560	5%	1/4W	F
R617	1-214-716-00	METAL	300	1%	1/4W	
R618	1-249-496-11	CARBON	100K	5%	1/2W	F
R619	1-216-444-11	METAL OXIDE	82K	5%	1W	F
R620	1-216-444-11	METAL OXIDE	82K	5%	1W	F
R621	1-249-427-11	CARBON	6.8K	5%	1/4W	
R622	1-217-190-21	WIREWOUND	0.15	10%	2W	F
R623	1-249-393-11	CARBON	10	5%	1/4W	
R624	1-247-887-00	CARBON	220K	5%	1/4W	
R625	1-247-887-00	CARBON	220K	5%	1/4W	
R626	1-249-436-11	CARBON	39K	5%	1/4W	
R627	1-249-429-11	CARBON	10K	5%	1/4W	
R628	1-214-777-00	METAL	100K	1%	1/4W	
R629	1-247-891-00	CARBON	330K	5%	1/4W	
R630	1-249-424-11	CARBON	3.9K	5%	1/4W	
R631	1-249-429-11	CARBON	10K	5%	1/4W	
R632	1-247-885-00	CARBON	180K	5%	1/4W	
R633	1-249-412-11	CARBON	390	5%	1/4W	
R634	1-211-867-11	WIREWOUND	180	5%	10W	
R635	1-249-441-11	CARBON	100K	5%	1/4W	
R636	1-247-753-11	CARBON	1.2K	5%	1/2W	F
R637	1-216-491-11	METAL OXIDE	56K	5%	3W	F
R638	1-216-491-11	METAL OXIDE	56K	5%	3W	F
R641	1-211-868-11	WIREWOUND	2.2K	5%	10W	
R642	1-247-807-31	CARBON	100	5%	1/4W	
R643	1-249-423-11	CARBON	3.3K	5%	1/4W	
R644	1-249-417-11	CARBON	1K	5%	1/4W	
R645	1-218-265-11	METAL GLAZE	8.2M	5%	1W	
R646	1-249-417-11	CARBON	1K	5%	1/4W	
R647	1-260-121-11	CARBON	68K	5%	1/2W	
R648	1-249-443-11	CARBON	0.47	5%	1/4W	F
R649	1-260-097-11	CARBON	680	5%	1/2W	
R650	1-249-422-11	CARBON	2.7K	5%	1/4W	
R652	1-247-895-00	CARBON	470K	5%	1/4W	
R653	1-260-124-11	CARBON	120K	5%	1/2W	
R654	1-215-924-71	METAL OXIDE	15K	5%	3W	F
R655	1-249-440-11	CARBON	82K	5%	1/4W	
R656	1-247-883-00	CARBON	150K	5%	1/4W	
R659	1-249-443-11	CARBON	0.47	5%	1/4W	F
R660	1-215-427-00	METAL	1.8K	1%	1/4W	
R661	1-215-412-00	METAL	430	1%	1/4W	
R662	1-260-123-11	CARBON	100K	5%	1/2W	
R663	1-260-089-11	CARBON	150	5%	1/2W	
R664	1-216-390-71	METAL OXIDE	1.2	5%	3W	F
R665	1-216-390-71	METAL OXIDE	1.2	5%	3W	F
R666	1-216-368-11	METAL OXIDE	0.82	5%	2W	F
R667	1-205-943-11	WIREWOUND	1	5%	20W	
R669	1-215-415-00	METAL	560	1%	1/4W	
R670	1-249-435-11	CARBON	33K	5%	1/4W	
R671	1-249-429-11	CARBON	10K	5%	1/4W	
R672	1-215-469-00	METAL	100K	1%	1/4W	
R673	1-249-437-11	CARBON	47K	5%	1/4W	
R674	1-247-889-00	CARBON	270K	5%	1/4W	
R675	1-249-429-11	CARBON	10K	5%	1/4W	
R676	1-247-883-00	CARBON	150K	5%	1/4W	
R677	1-260-120-11	CARBON	56K	5%	1/2W	
R678	1-249-436-11	CARBON	39K	5%	1/4W	
✱R690	1-214-721-00	METAL	470	1%	1/4W	
✱R690	1-215-414-00	METAL	510	1%	1/4W	
✱R690	1-214-723-00	METAL	560	1%	1/4W	
✱R690	1-214-127-00	METAL	620	1%	1/4W	
✱R690	1-214-725-00	METAL	680	1%	1/4W	
✱R690	1-215-418-00	METAL	750	1%	1/4W	
✱R690	1-214-727-00	METAL	820	1%	1/4W	
✱R690	1-214-728-11	METAL	910	1%	1/4W	
✱R690	1-214-729-00	METAL	1K	1%	1/4W	
✱R690	1-214-730-00	METAL	1.1K	1%	1/4W	

The components identified by shading and mark ⚠ are critical for safety.
Replace only with part number specified.

Les composants identifies par une trame et une marque ⚠ sont critiques pour la securite.
Ne les remplacer que par une piece portant le numero specifie.

• ✱ : Selected to yield optimum performance.

G C

REF.NO.	PART NO.	DESCRIPTION				REMARK
*R690	1-214-731-00	METAL	1.2K	1%	1/4W	
*R690	1-214-732-00	METAL	1.3K	1%	1/4W	
*R690	1-214-733-00	METAL	1.5K	1%	1/4W	
*R690	1-215-426-00	METAL	1.6K	1%	1/4W	
*R690	1-214-735-00	METAL	1.8K	1%	1/4W	
*R690	1-214-736-00	METAL	2K	1%	1/4W	
*R690	1-214-737-00	METAL	2.2K	1%	1/4W	
*R690	1-214-739-00	METAL	2.7K	1%	1/4W	
*R690	1-214-741-00	METAL	3.3K	1%	1/4W	
*R690	1-214-743-00	METAL	3.9K	1%	1/4W	
*R690	1-214-745-00	METAL	4.7K	1%	1/4W	
*R690	1-214-747-00	METAL	5.6K	1%	1/4W	
*R690	1-214-749-00	METAL	6.8K	1%	1/4W	
		<VARIABLE RESISTOR>				
RV601	1-241-759-21	RES, ADJ, CARBON 220				
		<RELAY>				
RY601⚠	1-515-601-11	RELAY				
		<TRANSFOMER>				
T601 ⚠	1-426-716-11	TRANSFORMER, LINE FILTER (LFT)				
T602 ⚠	1-426-716-11	TRANSFORMER, LINE FILTER (LFT)				
T603	1-437-090-00	HDT				
T604	1-426-665-11	TRANSFORMER, CONVERTER (SRT)				
		<THERMISTOR>				
TH601	1-807-973-11	THERMISTOR				
TH602	1-807-973-11	THERMISTOR				
THP601⚠	1-808-059-32	THERMISTOR, POSITIVE				
**********						
*A-1331-299-A		C BOARD, COMPLETE				
		**********				
*4-374-912-01		COVER (MAIN), CV VOL				
*4-374-913-01		COVER (REAR LID), CV VOL				
		<CAPACITOR>				
C701	1-102-157-00	CERAMIC	560PF	10%	500V	
C702	1-102-157-00	CERAMIC	560PF	10%	500V	
C703	1-102-157-00	CERAMIC	560PF	10%	500V	
C704	1-102-121-00	CERAMIC	0.0022MF	10%	50V	
C705	1-126-101-11	ELECT	100MF	20%	16V	
C706	1-102-074-00	CERAMIC	0.001MF	10%	50V	
C707	1-162-116-00	CERAMIC	680PF	10%	2KV	
C708	1-136-601-11	FILM	0.01MF	5%	630V	
C710	1-101-880-00	CERAMIC	47PF	5%	50V	
C711	1-101-880-00	CERAMIC	47PF	5%	50V	
C712	1-101-880-00	CERAMIC	47PF	5%	50V	
C713	1-123-946-00	ELECT	4.7MF	20%	250V	
C714	1-102-976-00	CERAMIC	180PF	5%	50V	
C715	1-102-976-00	CERAMIC	180PF	5%	50V	
C716	1-102-976-00	CERAMIC	180PF	5%	50V	
C717	1-106-399-00	MYLAR	0.22MF	10%	200V	
C718	1-106-399-00	MYLAR	0.22MF	10%	200V	
C720	1-108-700-11	MYLAR	0.047MF	10%	200V	
C734	1-102-973-00	CERAMIC	100PF	5%	50V	
C735	1-102-816-00	CERAMIC	120PF	5%	50V	
C736	1-102-816-00	CERAMIC	120PF	5%	50V	

REF.NO.	PART NO.	DESCRIPTION				REMARK
		<CONNECTOR>				
CN701	*1-564-511-51	PLUG, CONNECTOR 8P				
CN702	*1-573-964-11	PIN, CONNECTOR (PC BOARD) 6P				
CN703	*1-691-134-11	PIN, CONNECTOR (PC BOARD) 2P				
		<DIODE>				
D701	8-719-911-19	DIODE 1SS119				
D702	8-719-911-19	DIODE 1SS119				
D703	8-719-911-19	DIODE 1SS119				
D704	8-719-911-19	DIODE 1SS119				
D705	8-719-911-19	DIODE 1SS119				
D706	8-719-911-19	DIODE 1SS119				
D707	8-719-901-83	DIODE 1SS83				
D708	8-719-901-83	DIODE 1SS83				
D709	8-719-901-83	DIODE 1SS83				
D713	8-719-901-83	DIODE 1SS83				
D715	8-719-901-83	DIODE 1SS83				
D716	8-719-901-83	DIODE 1SS83				
D717	8-719-901-83	DIODE 1SS83				
		<JACK>				
J701 ⚠	1-526-819-11	SOCKET, PICTURE TUBE				
		<COIL>				
L701	1-410-667-31	INDUCTOR	22UH			
L705	1-412-532-11	INDUCTOR	39UH			
		<TRANSISTOR>				
Q701	8-729-119-78	TRANSISTOR 2SC2785-HFE				
Q702	8-729-119-78	TRANSISTOR 2SC2785-HFE				
Q703	8-729-119-78	TRANSISTOR 2SC2785-HFE				
Q704	8-729-200-17	TRANSISTOR 2SA1091-O				
Q705	8-729-200-17	TRANSISTOR 2SA1091-O				
Q706	8-729-200-17	TRANSISTOR 2SA1091-O				
Q707	8-729-326-11	TRANSISTOR 2SC2611				
Q708	8-729-326-11	TRANSISTOR 2SC2611				
Q709	8-729-326-11	TRANSISTOR 2SC2611				
Q710	8-729-200-17	TRANSISTOR 2SA1091-O				
Q711	8-729-200-17	TRANSISTOR 2SA1091-O				
Q712	8-729-200-17	TRANSISTOR 2SA1091-O				
Q713	8-729-255-12	TRANSISTOR 2SC2551-O				
Q714	8-729-255-12	TRANSISTOR 2SC2551-O				
Q715	8-729-119-78	TRANSISTOR 2SC2785-HFE				
Q716	8-729-119-78	TRANSISTOR 2SC2785-HFE				
Q717	8-729-119-78	TRANSISTOR 2SC2785-HFE				
		<RESISTOR>				
R702	1-247-903-00	CARBON	1M	5%	1/4W	
R704	1-215-405-00	METAL	220	1%	1/4W	
R705	1-215-405-00	METAL	220	1%	1/4W	
R706	1-215-405-00	METAL	220	1%	1/4W	
R707	1-249-431-11	CARBON	15K	5%	1/4W	
R708	1-249-431-11	CARBON	15K	5%	1/4W	
R709	1-249-431-11	CARBON	15K	5%	1/4W	
R710	1-215-391-00	METAL	56	1%	1/4W	
R711	1-215-394-00	METAL	75	1%	1/4W	
R712	1-215-392-00	METAL	62	1%	1/4W	

C H J

Les composants identifies par une trame et une marque ⚠ sont critiques pour la securite. Ne les remplacer que par une piece portant le numero specifie.

The components identified by shading and mark ⚠ are critical for safety. Replace only with part number specified.

REF.NO.	PART NO.	DESCRIPTION				REMARK
R715	1-202-818-00	SOLID	1K	20%	1/2W	
R716	1-216-486-71	METAL OXIDE	8.2K	5%	3W	F
R717	1-202-818-00	SOLID	1K	20%	1/2W	
R718	1-216-486-71	METAL OXIDE	8.2K	5%	3W	F
R719	1-202-818-00	SOLID	1K	20%	1/2W	
R720	1-216-486-71	METAL OXIDE	8.2K	5%	3W	F
R722	1-202-883-11	SOLID	680K	20%	1/2W	
R723	1-202-838-00	SOLID	100K	20%	1/2W	
R724	1-202-842-11	SOLID	220K	20%	1/2W	
R725	1-202-719-00	SOLID	1M	20%	1/2W	
R731	1-249-409-11	CARBON	220	5%	1/4W	
R732	1-249-409-11	CARBON	220	5%	1/4W	
R733	1-249-409-11	CARBON	220	5%	1/4W	
R734	1-249-409-11	CARBON	220	5%	1/4W	F
R735	1-249-409-11	CARBON	220	5%	1/4W	F
R736	1-249-409-11	CARBON	220	5%	1/4W	F
R737	1-247-807-31	CARBON	100	5%	1/4W	
R738	1-247-807-31	CARBON	100	5%	1/4W	
R739	1-247-807-31	CARBON	100	5%	1/4W	
R740	1-249-429-11	CARBON	10K	5%	1/4W	F
R741	1-249-429-11	CARBON	10K	5%	1/4W	F
R742	1-249-429-11	CARBON	10K	5%	1/4W	F
R744	1-249-429-11	CARBON	10K	5%	1/4W	
R745	1-249-429-11	CARBON	10K	5%	1/4W	
R746	1-215-879-11	METAL OXIDE	47K	5%	1W	F
R747	1-247-725-11	CARBON	10K	5%	1/4W	F
R748	1-247-713-11	CARBON	1K	5%	1/4W	F
R749	1-215-902-71	METAL OXIDE	47K	5%	2W	F
R750	1-249-400-11	CARBON	39	5%	1/4W	F
R751	1-247-887-00	CARBON	220K	5%	1/4W	
R752	1-247-887-00	CARBON	220K	5%	1/4W	
R753	1-247-887-00	CARBON	220K	5%	1/4W	

<VARIABLE RESISTOR>

RV707	1-230-641-11	RES, ADJ, METAL GLAZE 2.2M
RV708⚠	1-230-798-21	RES, ADJ, METAL GLAZE 90M
RV709	1-230-641-11	RES, ADJ, METAL GLAZE 2.2M

****

*A-1371-971-A H BOARD, COMPLETE (PVM-1351Q/1354Q)
****
*A-1371-972-A H BOARD, COMPLETE (PVM-1350)
****

*4-348-208-00 HOLDER, LED

<CONNECTOR>

CN105	*1-564-527-11	PLUG, CONNECTOR 12P
CN106	*1-564-526-11	PLUG, CONNECTOR 11P

<DIODE>

D2102	8-719-920-05	DIODE SLP281C-50
D2103	8-719-812-32	DIODE TLY123 (PVM-1351Q/1354Q)

<RESISTOR>

REF.NO.	PART NO.	DESCRIPTION				REMARK
R2101	1-249-419-11	CARBON	1.5K	5%	1/4W	
R2102	1-249-416-11	CARBON	820	5%	1/4W	(PVM-1351Q/1354Q)
R2107	1-249-430-11	CARBON	12K	5%	1/4W	
R2136	1-249-414-11	CARBON	560	5%	1/4W	(PVM-1351Q/1354Q)
R2137	1-249-414-11	CARBON	560	5%	1/4W	(PVM-1351Q/1354Q)
R2138	1-249-414-11	CARBON	560	5%	1/4W	(PVM-1351Q/1354Q)
R2139	1-249-414-11	CARBON	560	5%	1/4W	
R2140	1-249-414-11	CARBON	560	5%	1/4W	
R2141	1-249-414-11	CARBON	560	5%	1/4W	(PVM-1351Q/1354Q)
R2142	1-249-414-11	CARBON	560	5%	1/4W	
R2143	1-249-414-11	CARBON	560	5%	1/4W	
R2144	1-249-414-11	CARBON	560	5%	1/4W	
R2145	1-249-414-11	CARBON	560	5%	1/4W	
R2147	1-215-427-00	METAL	1.8K	1%	1/4W	(PVM-1351Q/1354Q)
R2148	1-215-419-00	METAL	820	1%	1/4W	(PVM-1351Q/1354Q)
R2149	1-215-414-00	METAL	510	1%	1/4W	(PVM-1351Q/1354Q)
R2150	1-215-409-00	METAL	330	1%	1/4W	
R2151	1-215-407-00	METAL	270	1%	1/4W	
R2152	1-215-404-00	METAL	200	1%	1/4W	
R2153	1-215-401-11	METAL	150	1%	1/4W	
R2154	1-215-399-00	METAL	120	1%	1/4W	
R2155	1-215-397-00	METAL	100	1%	1/4W	
R2156	1-215-421-00	METAL	1K	1%	1/4W	
R2157	1-215-416-00	METAL	620	1%	1/4W	
R2158	1-215-410-00	METAL	360	1%	1/4W	
R2159	1-215-405-00	METAL	220	1%	1/4W	
R2160	1-215-421-00	METAL	1K	1%	1/4W	

<VARIABLE RESISTOR>

RV2101	1-241-846-11	RES, VAR, CARBON 20K
RV2103	1-241-845-11	RES, VAR, CARBON 20K
RV2105	1-241-845-11	RES, VAR, CARBON 20K
RV2109	1-241-845-11	RES, VAR, CARBON 20K
RV2113	1-241-845-11	RES, VAR, CARBON 20K
RV2117	1-241-846-11	RES, VAR, CARBON 20K

<SWITCH>

S2101	1-570-101-41	SWITCH, KEY BOARD
S2102	1-570-101-41	SWITCH, KEY BOARD
S2103	1-570-101-41	SWITCH, KEY BOARD
S2104	1-570-101-41	SWITCH, KEY BOARD
S2105	1-570-101-41	SWITCH, KEY BOARD (PVM-1351Q/1354Q)
S2106	1-570-969-11	SWITCH, KEY BOARD
S2107	1-570-969-11	SWITCH, KEY BOARD
S2108	1-570-101-41	SWITCH, KEY BOARD
S2109	1-570-101-41	SWITCH, KEY BOARD
S2110	1-570-101-41	SWITCH, KEY BOARD (PVM-1351Q/1354Q)
S2111	1-570-101-41	SWITCH, KEY BOARD (PVM-1351Q/1354Q)
S2112	1-570-101-41	SWITCH, KEY BOARD (PVM-1351Q/1354Q)
S2113	1-570-969-11	SWITCH, KEY BOARD
S2114	1-570-969-11	SWITCH, KEY BOARD

****

*A-1388-166-A J BOARD, COMPLETE
****

<CONNECTOR>

CN608	*1-695-561-11	PIN, CONNECTOR (PC BOARD) 7P

PVM-1350/1351Q/1354Q

SONY
SERVICE MANUAL

US Model
Canadian Model

PVM-1350
Serial No. 2,003,651 and Higher
Chassis No. SCC-G61D-A
PVM-1351Q
Serial No. 2,004,051 and Higher
Chassis No. SCC-G61C-A
PVM-1354Q
Serial No. 2,006,601 and Higher
Chassis No. SCC-G61B-A

SUPPLEMENT-1

File this supplement with the service manual.

• INTRODUCTION

Set, having CE mark (Safety mark), have been applied to the above Serial No. and changed G Block.
New G Block shows on next pages.

G [POWER SUPPLY]

– G BOARD –

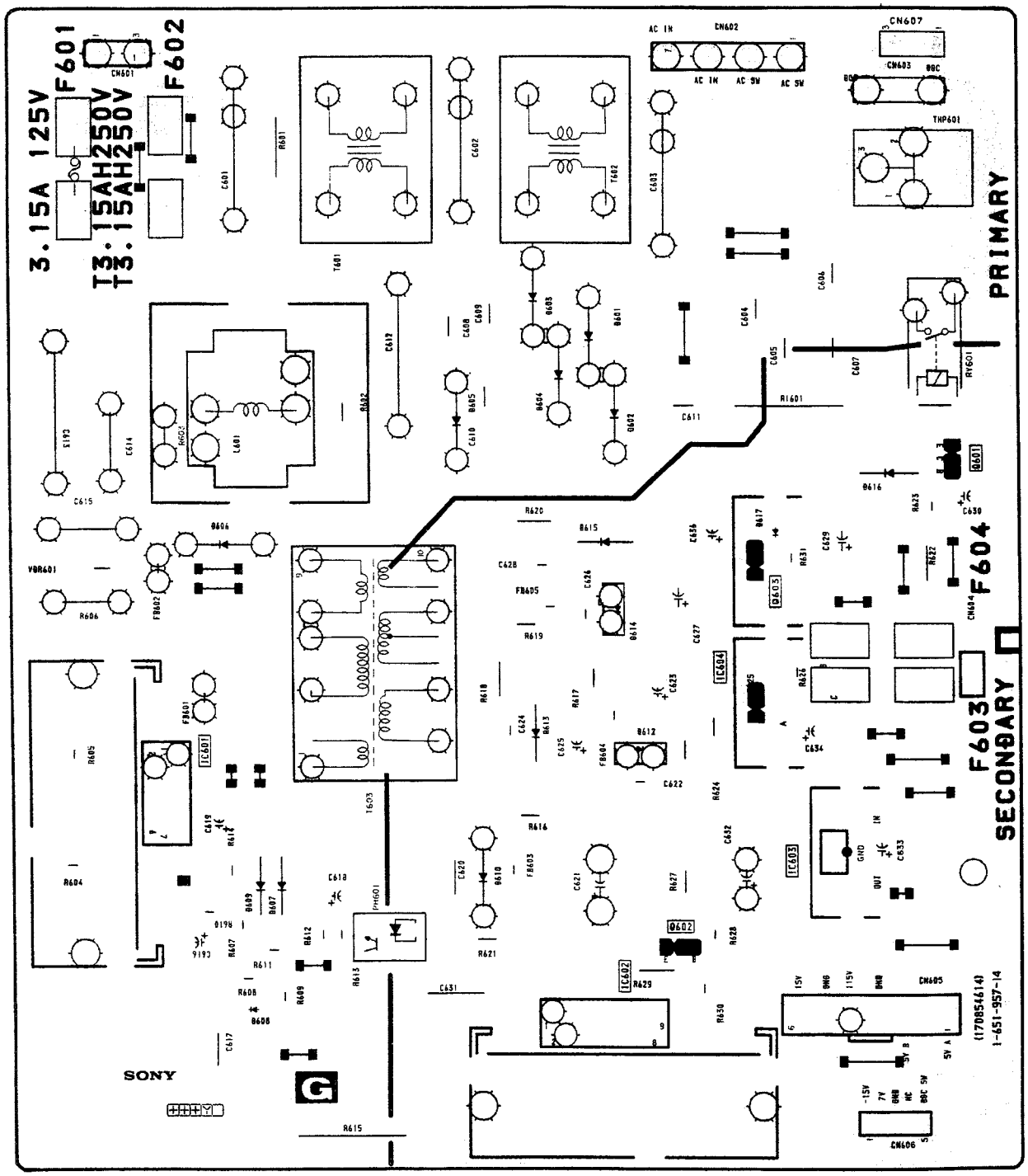

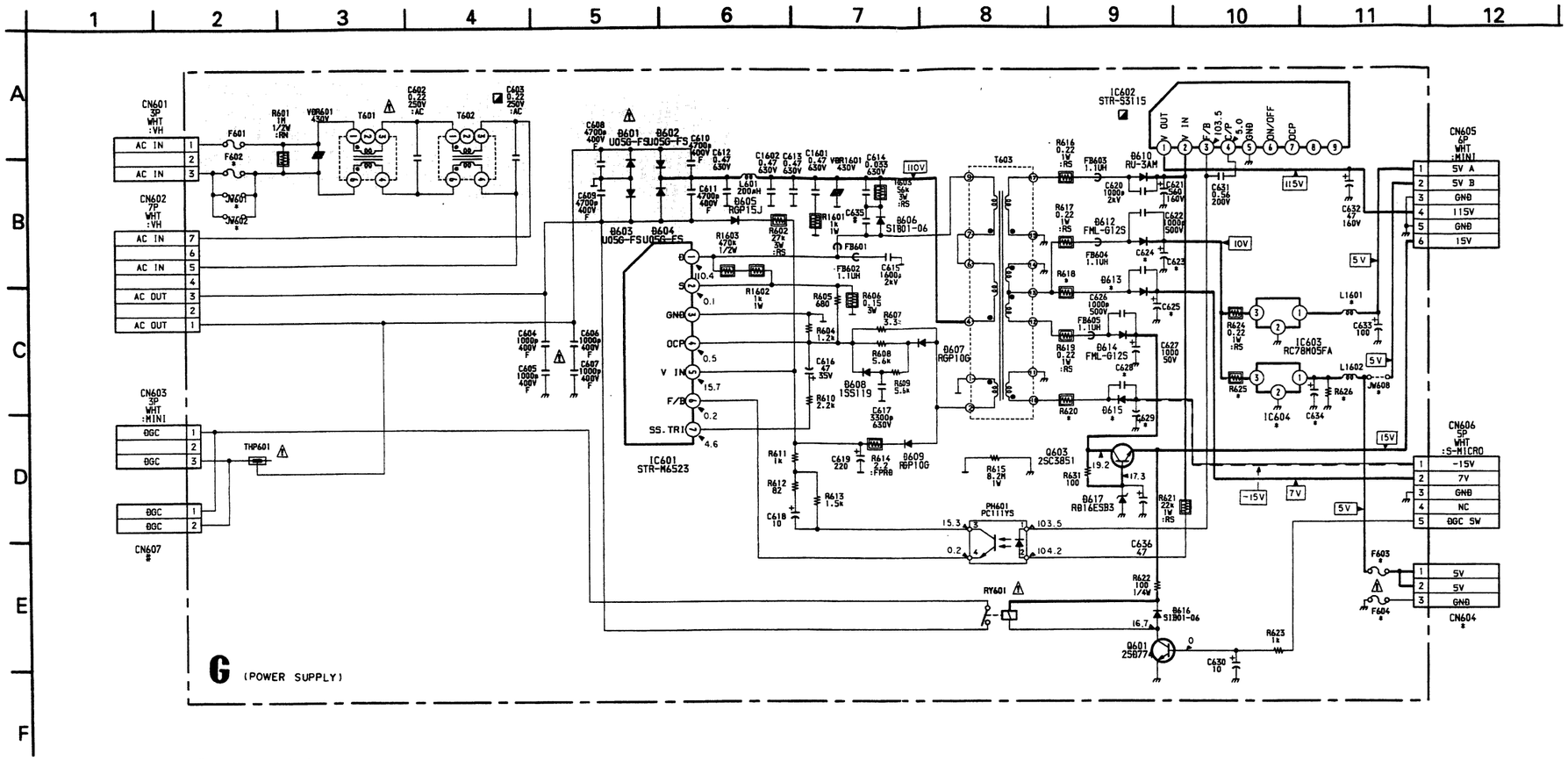

G BOARD

IC601	REF PWM
IC602	+B CONTROL
IC603	+5V A REG
IC604	+5V B REG
Q601	RELAY DRIVE
Q603	+15V REG
D601	MAIN RECT
D602	MAIN RECT
D603	MAIN RECT
D604	MAIN RECT
D605	OVP
D606	PROTECT
D607	SWITCH
D608	SWITCH
D609	SWITCH
D610	+B RECT
D612	+12V RECT
D613	+7V RECT
D614	+15V RECT
D615	–15V RECT
D616	PROTECT
D617	REF VOLTEGE

#: not mounted

〈G MOUNT DPL〉

	PVM-1351Q	
	PVM-1354Q	
	PVM-1454QM	
	PVM-1454PM	
	PVM-1954Q	PVM-1350
	PVM-2054QM	PVM-1450QM
C624	1000p 500V	#
C625	1000 25V	#
C628	1000p 500V	#
C629	1000 50V	#
C634	220	#
CN604	#	#
D613	RGP15J	#
D615	RGP15J	#
F602	#	#
F603	#	#
F604	#	#
IC604	MCT7805CT	#
JW601	12.5MM	12.5MM
JW602	12.5MM	12.5MM
JW608	10MM	#
R618	0.47 1/4W :FPRD	#
R620	0.47 1/4W :FPRD	#
R625	0.22 1W :RS	#
R625	470k 1/4W	#

The components identified by shading and mark ⚠ are critical for safety.
Replace only with part number specified.

Les composants identifies par une trame et une marque ⚠ sont critiques pour la securite.
Ne les remplacer que par une piece portant le numero specifie.

G

REF.NO.	PART NO.	DESCRIPTION	REMARK
	‡A-1316-213-A	G BOARD, COMPLETE (PVM-1351Q)	
		********** (PVM-1354Q)	
		(PVM-1954Q)	
		(PVM-1454PM)	
		(PVM-1454QM)	
		(PVM-2054QM)	
	‡A-1316-214-A	G BOARD, COMPLETE (PVM-1350)	
		********** (PVM-1450QM)	
		<CAPACITOR>	
C602	⚠1-136-360-51	FILM 0.22MF 20% 250V	
C603	⚠1-136-360-51	FILM 0.22MF 20% 250V	
C604	⚠1-161-741-21	CERAMIC 0.001MF 10% 400V	
C605	⚠1-161-741-21	CERAMIC 0.001MF 10% 400V	
C606	⚠1-161-741-21	CERAMIC 0.001MF 10% 400V	
C607	⚠1-161-741-21	CERAMIC 0.001MF 10% 400V	
C608	⚠1-161-953-71	CERAMIC 0.0047MF 20% 400V	
C609	⚠1-161-953-71	CERAMIC 0.0047MF 20% 400V	
C610	⚠1-161-953-71	CERAMIC 0.0047MF 20% 400V	
C611	⚠1-161-953-71	CERAMIC 0.0047MF 20% 400V	
C612	⚠1-137-484-61	FILM 0.47MF 10% 630V	
C613	1-137-484-11	FILM 0.47MF 10% 630V	
C614	1-129-720-00	FILM 0.033MF 10% 630V	
C615	1-136-619-11	FILM 0.0016MF 3% 2KV	
C616	1-124-910-11	ELECT 47MF 20% 35V	
C617	1-136-557-11	FILM 0.0033MF 10% 630V	
C618	1-126-096-11	ELECT 10MF 20% 25V	
C619	1-124-911-11	ELECT 220MF 20% 50V	
C620	1-161-754-00	CERAMIC 0.001MF 10% 2KV	
C621	1-125-494-11	ELECT(BLOCK) 560MF 20% 160V	
C622	1-102-038-00	CERAMIC 0.001MF 500V	
C623	1-126-944-11	ELECT 3300MF 20% 25V	
C624	1-102-038-00	CERAMIC 0.001MF 500V	
C625	1-124-557-11	ELECT 1000MF 20% 25V	
C626	1-102-038-00	CERAMIC 0.001MF 500V	
C627	1-124-922-11	ELECT 1000MF 20% 50V	
C628	1-102-038-00	CERAMIC 0.001MF 500V	
C629	1-124-922-11	ELECT 1000MF 20% 50V	
C630	1-124-907-11	ELECT 10MF 20% 50V	
C631	1-136-853-11	FILM 0.56MF 5% 200V	
C632	1-124-562-11	ELECT 47MF 20% 160V	
C633	1-124-122-11	ELECT 100MF 20% 50V	
C634	1-124-911-11	ELECT 220MF 20% 50V	
C636	1-124-910-11	ELECT 47MF 20% 50V	
C1602	1-137-484-11	FILM 0.47MF 10% 630V	
		<CONNECTOR>	
CN601	1-691-960-11	PIN, CONNECTOR (PC BOARD) 3P	
CN602	*1-695-561-11	PIN, CONNECTOR (PC BOARD) 7P	
CN603	*1-508-765-00	PIN, CONNECTOR (5MM PITCH) 3P	
CN604	*1-564-506-11	PLUG, CONNECTOR 3P	
CN605	*1-573-964-11	PIN, CONNECTOR (PC BOARD) 6P	
CN606	*1-564-508-11	PLUG, CONNECTOR 5P	
		<DIODE>	
D601	⚠8-719-032-39	DIODE DSA3A4-F3	
D602	⚠8-719-032-39	DIODE DSA3A4-F3	
D603	⚠8-719-032-39	DIODE DSA3A4-F3	
D604	⚠8-719-032-39	DIODE DSA3A4-F3	
D605	8-719-971-65	DIODE RGP15J-6040	
D606	8-719-300-33	DIODE RU-3AM	
D607	8-719-300-33	DIODE RU-3AM	
D608	8-719-911-19	DIODE 1SS119-25	
D609	8-719-300-33	DIODE RU-3AM	
D610	8-719-300-33	DIODE RU-3AM	
D612	8-719-045-48	DIODE FML-G12S	
D613	8-719-971-65	DIODE RGP15J-6040	
D614	8-719-045-48	DIODE FML-G12S	
D615	8-719-971-65	DIODE RGP15J-6040	
D616	8-719-300-33	DIODE RU-3AM	
D617	8-719-110-46	DIODE RD16ESB3	
		<FUSE>	
F603	⚠1-532-742-11	FUSE, GLASS TUBE 1.6A/125V	
	1-533-189-11	HOLDER, FUSE	
F604	⚠1-532-742-11	FUSE, GLASS TUBE 1.6A/125V	
	1-533-189-11	HOLDER, FUSE	
		<FERRITE BEAD>	
FB601	1-410-396-41	FERRITE BEAD INDUCTOR 0.45UH	
FB602	1-410-396-41	FERRITE BEAD INDUCTOR 0.45UH	
FB603	1-410-396-41	FERRITE BEAD INDUCTOR 0.45UH	
FB604	1-410-396-41	FERRITE BEAD INDUCTOR 0.45UH	
FB605	1-410-396-41	FERRITE BEAD INDUCTOR 0.45UH	
		<IC>	
IC601	8-749-924-69	IC STR-M6523	
	4-382-854-11	SCREW (M3X10), P, SW (+); IC601	
IC602	8-749-010-47	IC STR-S3115	
	4-382-854-11	SCREW (M3X10), P, SW (+); IC602	
IC603	8-759-701-56	IC NJM78M05FA	
	4-382-854-11	SCREW (M3X10), P, SW (+); IC603	
IC604	8-759-231-53	IC TA7805S	
	4-382-854-11	SCREW (M3X10), P, SW (+); IC604	
		<JUMPER>	
JW609	1-410-679-31	INDUCTOR 270UH (PVM-1353MD)	
		<COIL>	
L601	1-411-215-11	COIL, CHOKE 200UH	
L1601	1-410-679-31	INDUCTOR 270UH (PVM-1453MD)	
L1602	1-421-421-00	COIL, CHOKE	
		<PHOTO COUPLER>	
PH601	8-749-923-50	PHOTO COUPLER PC111YS	
		<TRANSISTOR>	
Q601	8-729-140-96	TRANSISTOR 2SD774-34	
Q603	8-729-303-61	TRANSISTOR 2SC3851-G	
	4-382-854-11	SCREW (M3X10), P, SW (+); Q603	
		<RESISTOR>	
R601	⚠1-202-885-91	SOLID 1M 20% 1/2W	
R602	1-216-489-11	METAL OXIDE 27K 5% 3W F	

G

The components identified by shading and mark ⚠ are critical for safety.
Replace only with part number specified.

Les composants identifies par une trame et une marque ⚠ sont critiques pour la securite.
Ne les remplacer que par une piece portant le numero specifie.

REF.NO.	PART NO.	DESCRIPTION	REMARK
R603	1-216-491-11	METAL OXIDE 56K 5% 3W F	
R604	1-249-418-11	CARBON 1.2K 5% 1/4W	
R605	1-249-415-11	CARBON 680 5% 1/4W	
R606	1-207-642-00	WIREWOUND 0.15 10% 3W F	
R607	1-249-423-11	CARBON 3.3K 5% 1/4W	
R608	1-249-426-11	CARBON 5.6K 5% 1/4W	
R609	1-249-426-11	CARBON 5.6K 5% 1/4W	
R610	1-249-421-11	CARBON 2.2K 5% 1/4W	
R611	1-249-417-11	CARBON 1K 5% 1/4W	
R612	1-249-404-00	CARBON 82 5% 1/4W	
R613	1-249-419-11	CARBON 1.5K 5% 1/4W	
R614	1-249-385-11	CARBON 2.2 5% 1/4W F	
R615	1-218-265-11	METAL 8.2M 5% 1W	
R616	1-216-341-11	METAL OXIDE 0.22 5% 1W F	
R617	1-216-341-11	METAL OXIDE 0.22 5% 1W F	
R618	1-249-443-11	CARBON 0.47 5% 1/4W F	
R619	1-216-341-11	METAL OXIDE 0.22 5% 1W F	
R620	1-249-443-11	CARBON 0.47 5% 1/4W F	
R621	1-215-877-11	METAL OXIDE 22K 5% 1W F	
R622	1-247-700-11	CARBON 100 5% 1/4W	
R623	1-249-417-11	CARBON 1K 5% 1/4W	
R624	1-216-341-11	METAL OXIDE 0.22 5% 1W F	
R625	1-216-341-11	METAL OXIDE 0.22 5% 1W F	
R626	1-247-895-00	CARBON 470K 5% 1/4W	
R631	1-247-807-31	CARBON 100 5% 1/4W	
R1602	1-215-869-11	METAL OXIDE 1K 5% 1W F	
R1603	1-202-846-00	SOLID 470K 20% 1/2W	
		<RELAY>	
RY601	⚠1-515-738-11	RELAY	
		<TRANSFORMER>	
T601	⚠1-426-716-11	TRANSFORMER, LINE FILTER (LFT)	
T602	⚠1-426-716-11	TRANSFORMER, LINE FILTER (LFT)	
T603	1-427-885-11	TRANSFORMER, CONVERTER (SRT)	
		<THERMISTOR>	
THP601	⚠1-808-059-32	THERMISTOR, POSITIVE	
		<VARISTOR>	
VDR601	⚠1-809-942-71	VARISTOR	

****

9-978-399-81

Sony Corporation
B & I Systems Company

English
95E24059-1
Printed in Japan
©1995. 5

The components identified by shading and mark ⚠ are critical for safety.
Replace only with part number specified.

Les composants identifies par une trame et une marque ⚠ sont critiques pour la securite.
Ne les remplacer que par une piece portant le numero specifie.

REF.NO.	PART NO.	DESCRIPTION	REMARK
		<SWITCH>	
S601	⚠1-692-921-11	SWITCH, PUSH (A.C. POWER)	
		**********	
	*A-1390-390-A	X BOARD, COMPLETE (PVM-1351Q/1354Q) **********	
		<CONNECTOR>	
CN108	*1-564-518-11	PLUG, CONNECTOR 3P	
		<DIODE>	
D001	8-719-023-78	DIODE SEL3810DLC05	
D002	8-719-023-78	DIODE SEL3810DLC05	
D003	8-719-023-78	DIODE SEL3810DLC05	
D004	8-719-023-78	DIODE SEL3810DLC05	
		**********	
	*A-1390-391-A	S BOARD, COMPLETE **********	
		<CAPACITOR>	
C805	1-102-978-00	CERAMIC 220PF 5% 50V	
C806	1-136-165-00	FILM 0.1MF 5% 50V	
C807	1-130-477-00	MYLAR 0.0033MF 5% 50V	
C810	1-136-165-00	FILM 0.1MF 5% 50V	
C811	1-136-165-00	FILM 0.1MF 5% 50V	
C812	1-136-175-00	FILM 0.068MF 5% 50V	
C813	1-124-907-11	ELECT 10MF 20% 50V	
C818	1-136-165-00	FILM 0.1MF 5% 50V	
		<CONNECTOR>	
CN801	*1-565-489-11	CONNECTOR, BOARD TO BOARD 13P	
		<IC>	
IC801	8-759-084-09	IC Z8612812PSC	
		<COIL>	
L801	1-410-470-11	INDUCTOR 10UH	
		<RESISTOR>	
R802	1-249-435-11	CARBON 33K 5% 1/4W	
R803	1-249-433-11	CARBON 22K 5% 1/4W	
R804	1-215-454-00	METAL 24K 1% 1/4W	
R805	1-215-461-00	METAL 47K 1% 1/4W	
R808	1-249-417-11	CARBON 1K 5% 1/4W	
R812	1-249-417-11	CARBON 1K 5% 1/4W	
R813	1-249-417-11	CARBON 1K 5% 1/4W	
R815	1-249-423-11	CARBON 3.3K 5% 1/4W	
R816	1-249-418-11	CARBON 1.2K 5% 1/4W	
R817	1-249-418-11	CARBON 1.2K 5% 1/4W	
R818	1-249-418-11	CARBON 1.2K 5% 1/4W	
R819	1-249-418-11	CARBON 1.2K 5% 1/4W	
R820	1-249-422-11	CARBON 2.7K 5% 1/4W	

REF.NO.	PART NO.	DESCRIPTION	REMARK
		**********	
		MISCELLANEOUS **********	
	⚠1-426-442-21	COIL, DEMAGNETIZATION	
	⚠1-451-329-11	DEFLECTION YOKE (Y14FZA)	
	⚠1-532-746-11	FUSE, GLASS TUBE (4.0A/125V)	
	1-537-735-11	TERMINAL BOARD ASSY, I/O (A) (PVM-1351Q/1354Q)	
	1-537-735-21	TERMINAL BOARD ASSY, I/O (B) (PVM-1350)	
	1-544-063-12	SPEAKER	
V901	⚠8-734-822-05	PICTURE TUBE (M34KBE20X) (PVM-1354Q)	
	⚠8-736-255-05	PICTURE TUBE (A34JHS12X) (PVM-1350/1351Q)	
		**********	
		ACCESSORIES AND PACKING MATERIALS **********	
	⚠1-551-812-11	CORD, POWER (7.0A/125V)	
	1-765-268-11	CORD, CONNECTION (PVM-1351Q/1354Q)	
	2-990-242-01	HOLDER (B), PLUG	
	3-758-528-21	MANUAL, INSTRUCTION (PVM-1350)	
	3-758-531-21	MANUAL, INSTRUCTION (PVM-1351Q/1354Q)	
	*4-043-759-01	INDIVIDUAL CARTON (PVM-1350)	
	*4-043-760-01	INDIVIDUAL CARTON (PVM-1354Q)	
	*4-043-761-01	INDIVIDUAL CARTON (PVM-1354Q)	
	*4-043-762-01	CUSHION (UPPER) (ASSY)	
	*4-043-763-01	CUSHION (LOWER) (ASSY)	
	4-044-040-01	LABEL, TALLY (PVM-1351Q/1354Q)	
	*4-381-155-01	BAG, PROTECTION	